ANT SWITCH

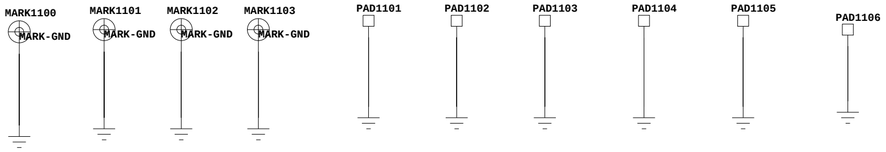

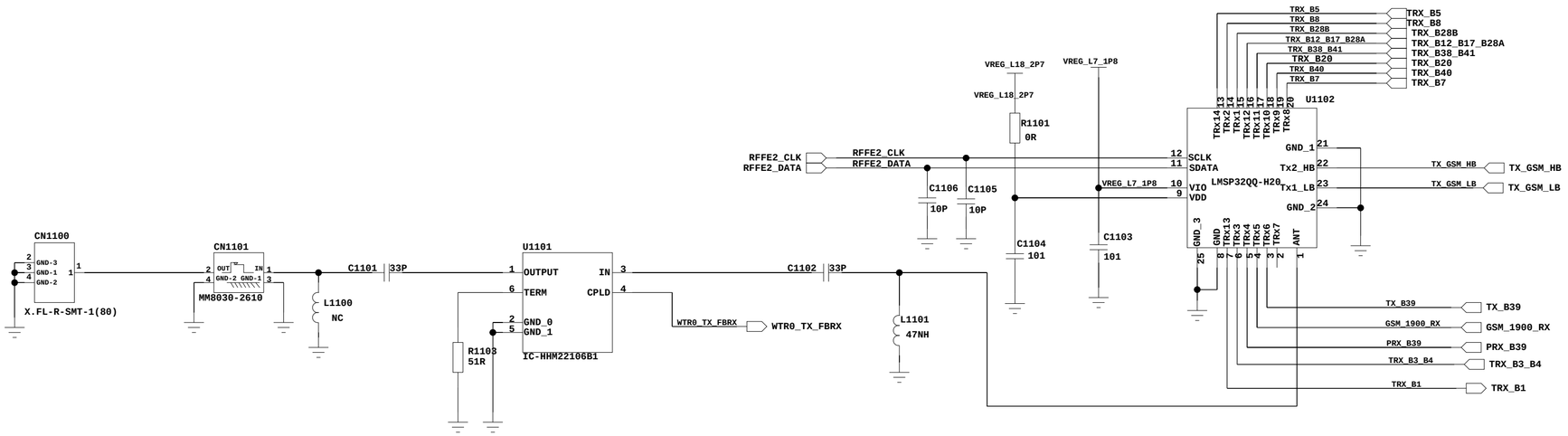

B34/39 LPF

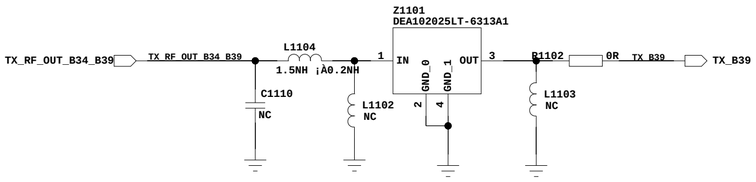

MMMB PA

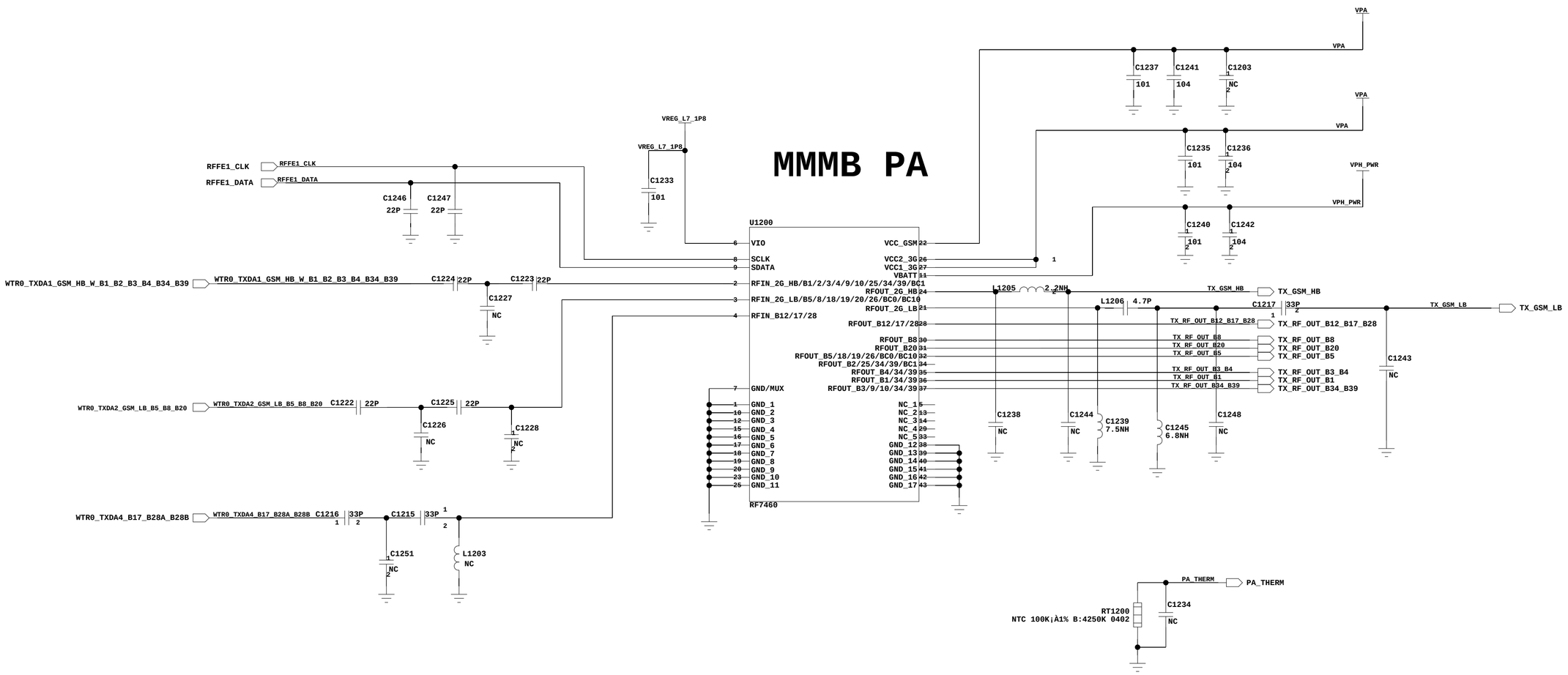

QFE2101

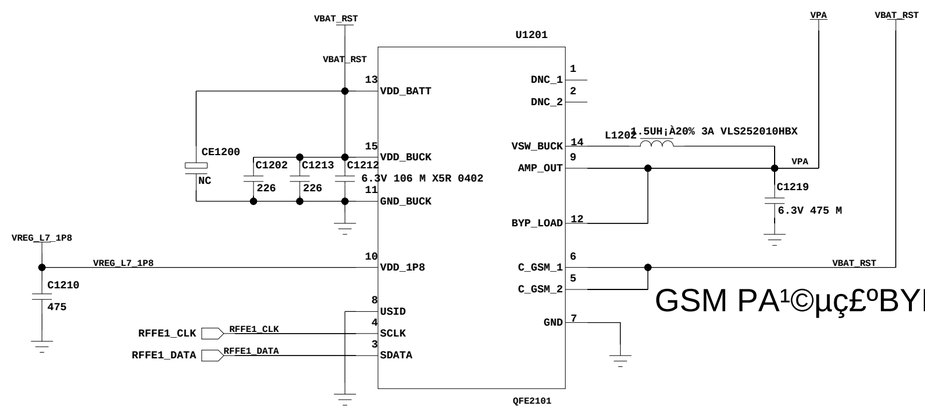

GSM PA¹©µç£ºBYPASSÄ£Ê½

Approved By

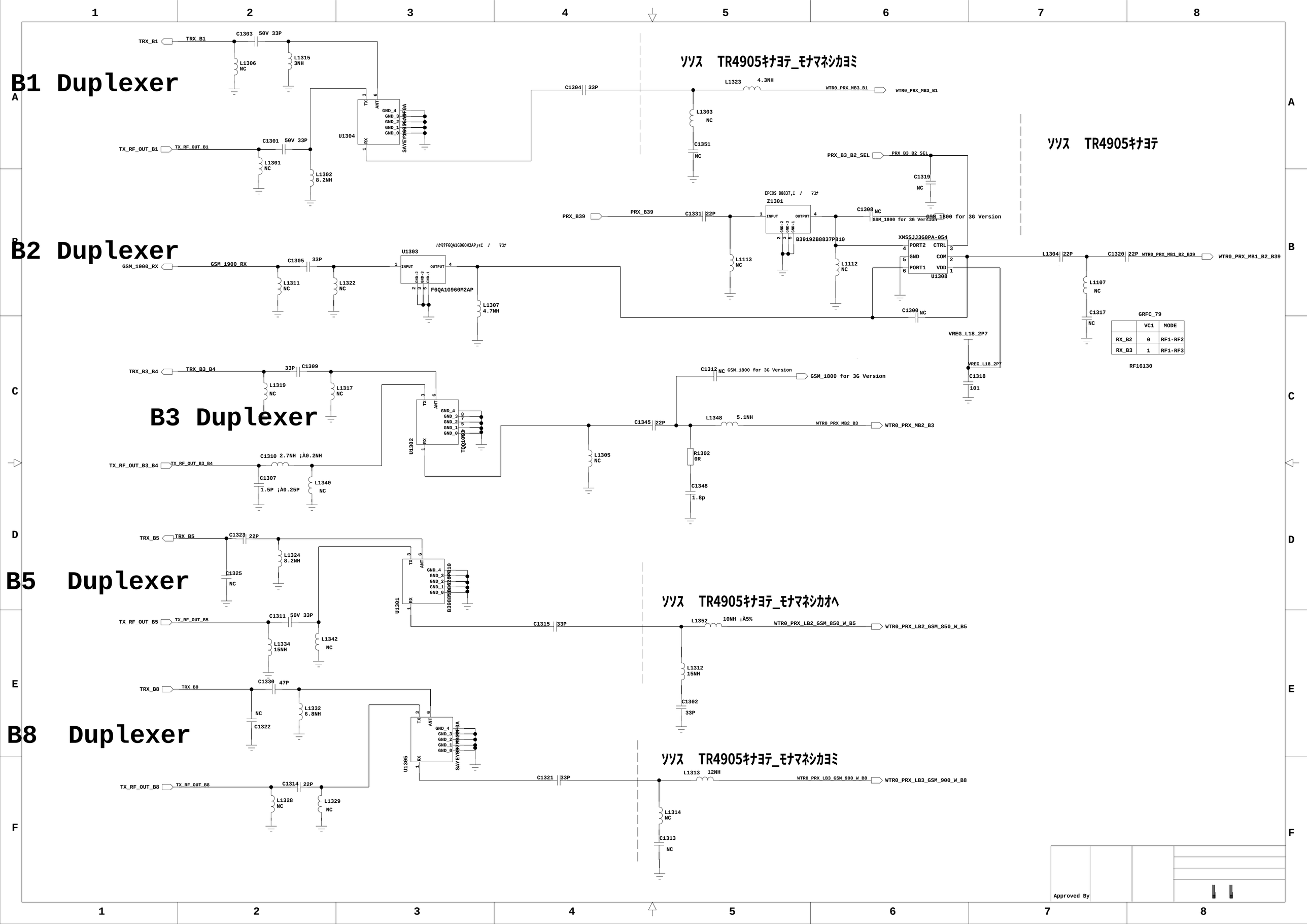
B1 Duplexer
B2 Duplexer
B3 Duplexer
B5 Duplexer
B8 Duplexer
ソソス TR4905キナヨテ_モナマネシカヨミ
ソソス TR4905キナヨテ
ソソス TR4905キナヨテ_モナマネシカオヘ
ソソス TR4905キナヨテ_モナマネシカヨミ
TRX_B1
TRX_B1
C1303 50V 33P
L1306 NC
L1315 3NH
TX_RF_OUT_B1
TX_RF_OUT_B1
C1301 50V 33P
L1301 NC
L1302 8.2NH
U1304
SAYEY009F0A
C1304 33P
L1323 4.3NH
WTR0_PRX_MB3_B1
WTR0_PRX_MB3_B1
L1303 NC
C1351 NC
PRX_B3_B2_SEL
PRX_B3_B2_SEL
C1319 NC
PRX_B39
PRX_B39
C1331 22P
Z1301
INPUT
OUTPUT
C1308 NC
GSM_1800 for 3G Version
GSM_1800 for 3G Version
B39192B8837P810
L1113 NC
L1112 NC
XMSSJJ3G0PA-054
PORT2
CTRL
GND
COM
PORT1
VDD
U1308
L1304 22P
C1320 22P
WTR0_PRX_MB1_B2_B39
WTR0_PRX_MB1_B2_B39
L1107 NC
C1317 NC
GSM_1900_RX
GSM_1900_RX
C1305 33P
L1311 NC
L1322 NC
U1303
F6QA1G960M2AP
L1307 4.7NH
C1300 NC
VREG_L18_2P7
VREG_L18_2P7
C1318 101
GRFC_79
VC1 MODE
RX_B2 0 RF1-RF2
RX_B3 1 RF1-RF3
RF16130
TRX_B3_B4
TRX_B3_B4
33P C1309
L1319 NC
L1317 NC
C1312 NC
GSM_1800 for 3G Version
GSM_1800 for 3G Version
C1345 22P
L1348 5.1NH
WTR0_PRX_MB2_B3
WTR0_PRX_MB2_B3
U1302
TQQ1003
L1305 NC
R1302 0R
C1348 1.8p
TX_RF_OUT_B3_B4
TX_RF_OUT_B3_B4
C1310 2.7NH ¡À0.2NH
C1307 1.5P ¡À0.25P
L1340 NC
TRX_B5
TRX_B5
C1323 22P
L1324 8.2NH
C1325 NC
U1301
B39882B8610P810
TX_RF_OUT_B5
TX_RF_OUT_B5
C1311 50V 33P
L1334 15NH
L1342 NC
C1315 33P
L1352 10NH ¡À5%
WTR0_PRX_LB2_GSM_850_W_B5
WTR0_PRX_LB2_GSM_850_W_B5
L1312 15NH
C1302 33P
TRX_B8
TRX_B8
C1330 47P
NC C1322
L1332 6.8NH
U1305
SAYEY009F0A
TX_RF_OUT_B8
TX_RF_OUT_B8
C1314 22P
L1328 NC
L1329 NC
C1321 33P
L1313 12NH
WTR0_PRX_LB3_GSM_900_W_B8
WTR0_PRX_LB3_GSM_900_W_B8
L1314 NC
C1313 NC
Approved By

B7 TRX

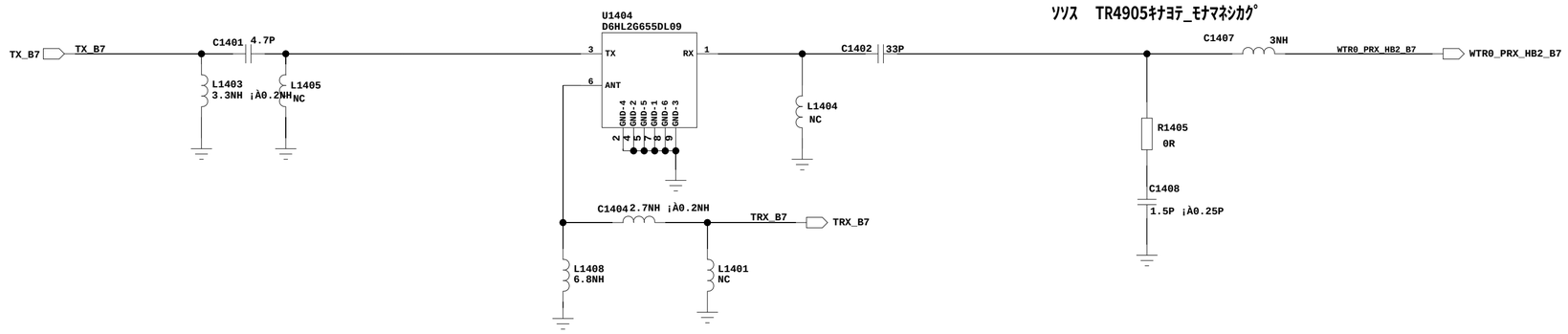

PRX B7 & B38_B41 Switch

RF1630 GRFC_80

	VC1	MODE
B38_B41	0	RF2-RF1
B7	1	RF3-RF1

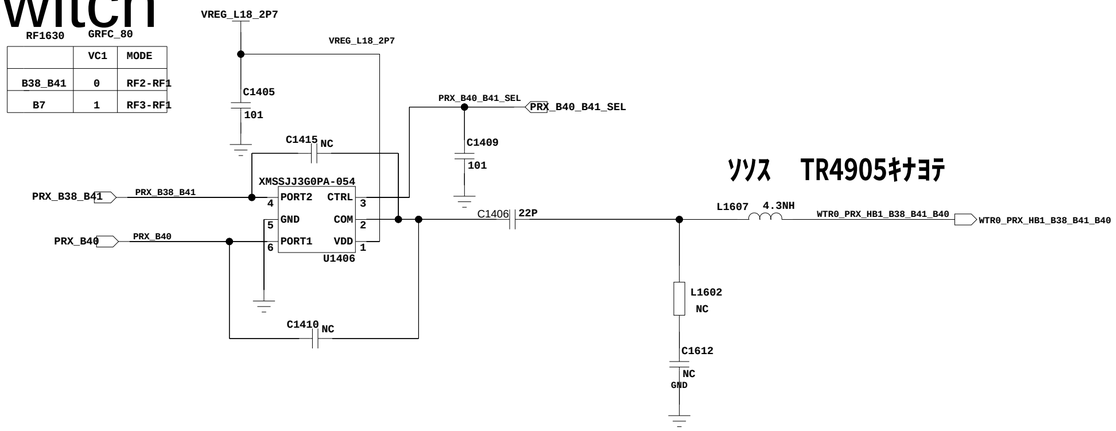

GPS

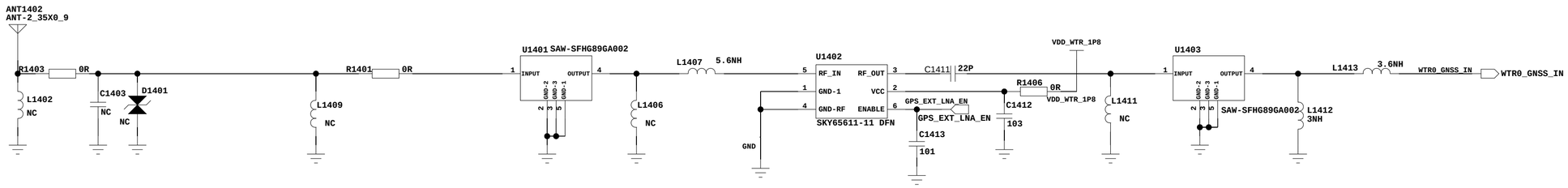

Approved By

B20 TRX

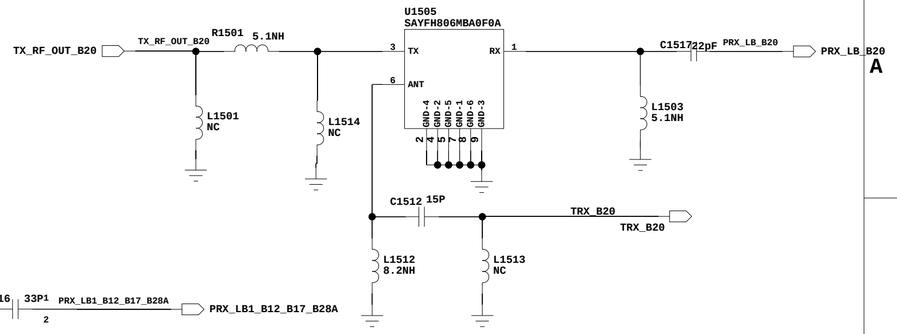

B4/B17/B20/B28 TRX

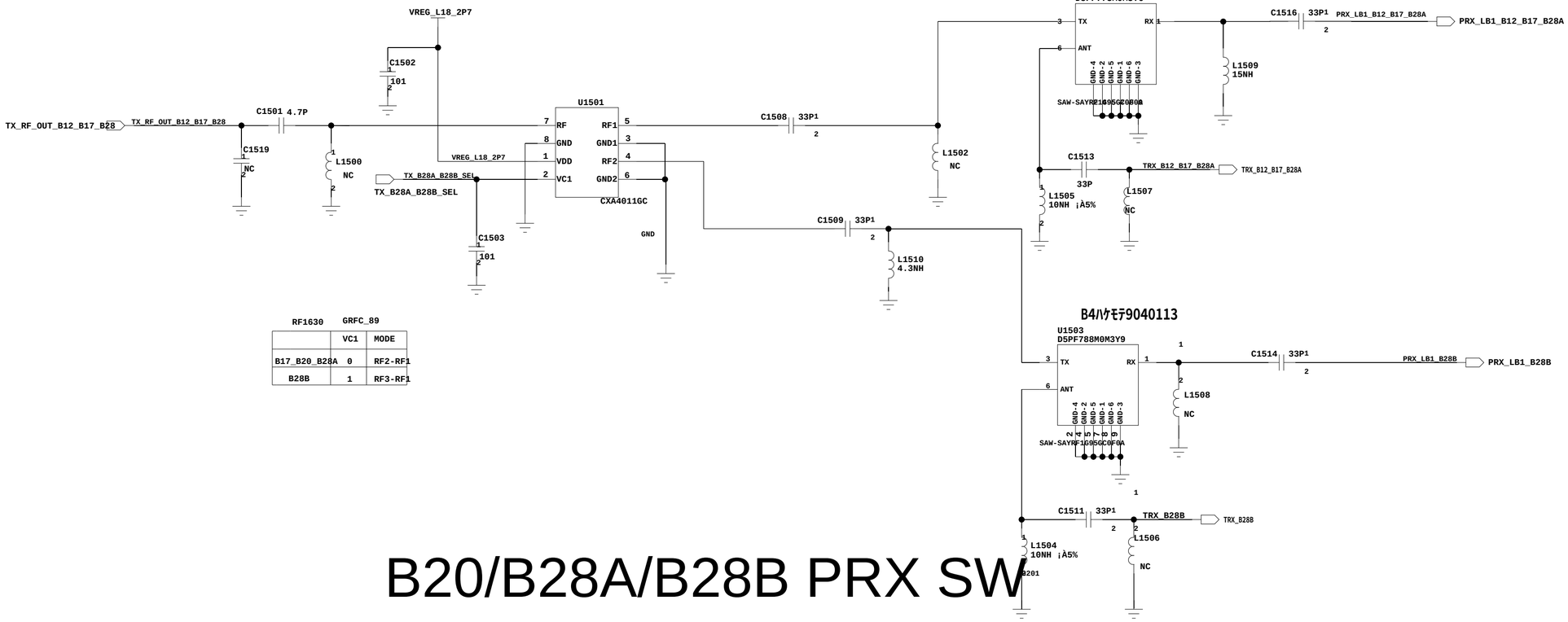

RF1630 GRFC_89

	VC1	MODE
B17_B20_B28A	0	RF2-RF1
B28B	1	RF3-RF1

B20/B28A/B28B PRX SW

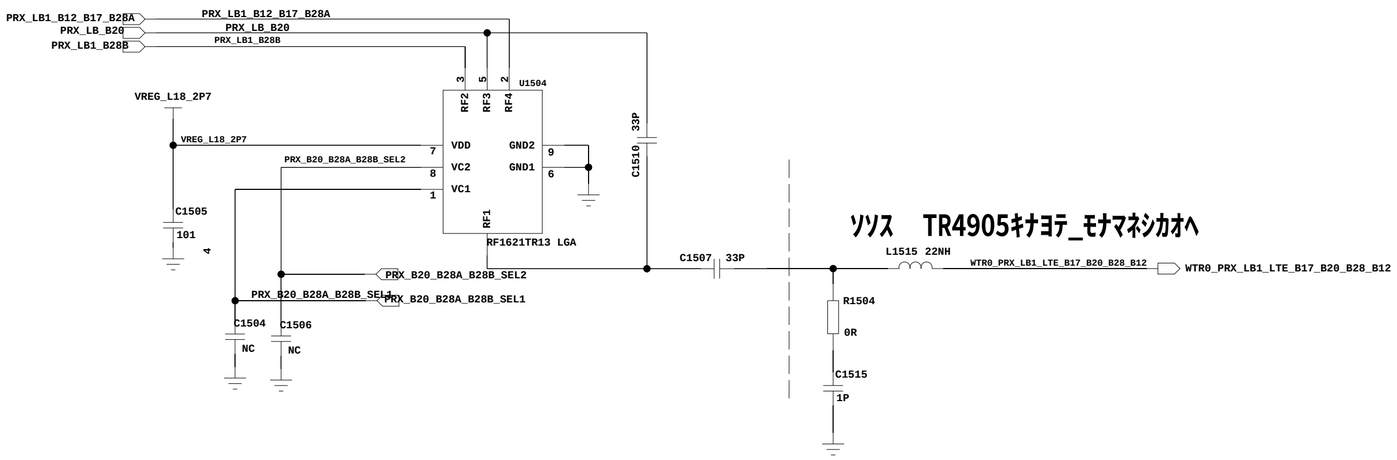

ｿｿｽ　TR4905ｷﾅﾖﾃ_ﾓﾅﾏﾈｼｶｵﾍ

Approved By

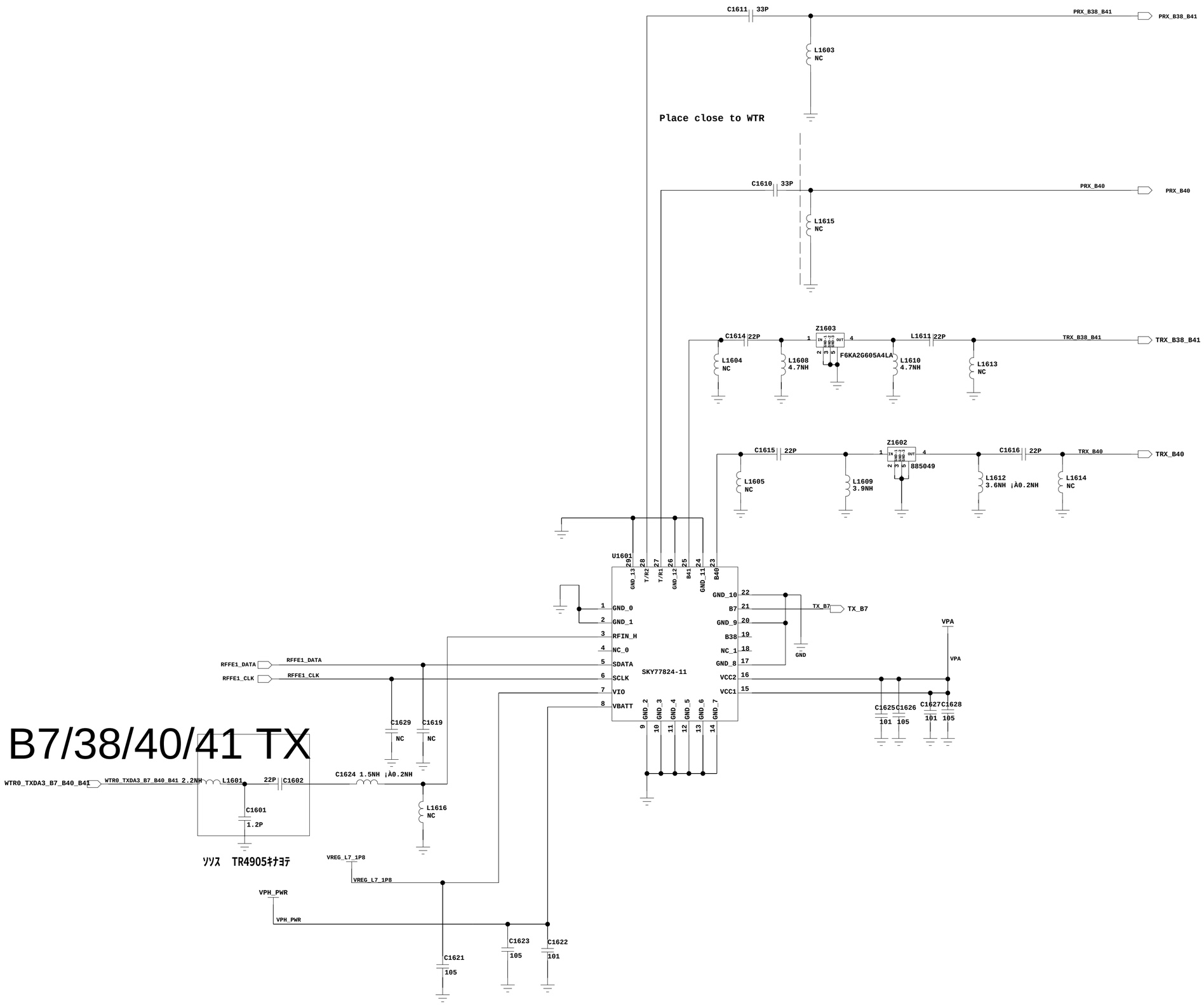
C1611 33P
PRX_B38_B41
PRX_B38_B41
L1603
NC
Place close to WTR
C1610 33P
PRX_B40
PRX_B40
L1615
NC
Z1603
C1614 22P
L1611 22P
TRX_B38_B41
TRX_B38_B41
L1604
NC
L1608
4.7NH
F6KA2G605A4LA
L1610
4.7NH
L1613
NC
Z1602
C1615 22P
C1616 22P
TRX_B40
TRX_B40
885049
L1605
NC
L1609
3.9NH
L1612
3.6NH ¡À0.2NH
L1614
NC
U1601
GND_13
T/R2
T/R1
GND_12
B41
GND_11
B40
GND_0
GND_1
RFIN_H
NC_0
SDATA
SCLK
VIO
VBATT
GND_10
B7
GND_9
B38
NC_1
GND_8
VCC2
VCC1
GND_2
GND_3
GND_4
GND_5
GND_6
GND_7
SKY77824-11
TX_B7
TX_B7
GND
VPA
VPA
RFFE1_DATA
RFFE1_DATA
RFFE1_CLK
RFFE1_CLK
C1629
NC
C1619
NC
C1625 101
C1626 105
C1627 101
C1628 105
B7/38/40/41 TX
WTR0_TXDA3_B7_B40_B41
WTR0_TXDA3_B7_B40_B41 2.2NH
L1601
22P
C1602
C1624 1.5NH ¡À0.2NH
C1601
1.2P
L1616
NC
ｿﾝｽ TR4905ｷﾅﾖﾃ
VREG_L7_1P8
VREG_L7_1P8
VPH_PWR
VPH_PWR
C1621
105
C1623
105
C1622
101

Approved By

DRX B39 & B3 Switch

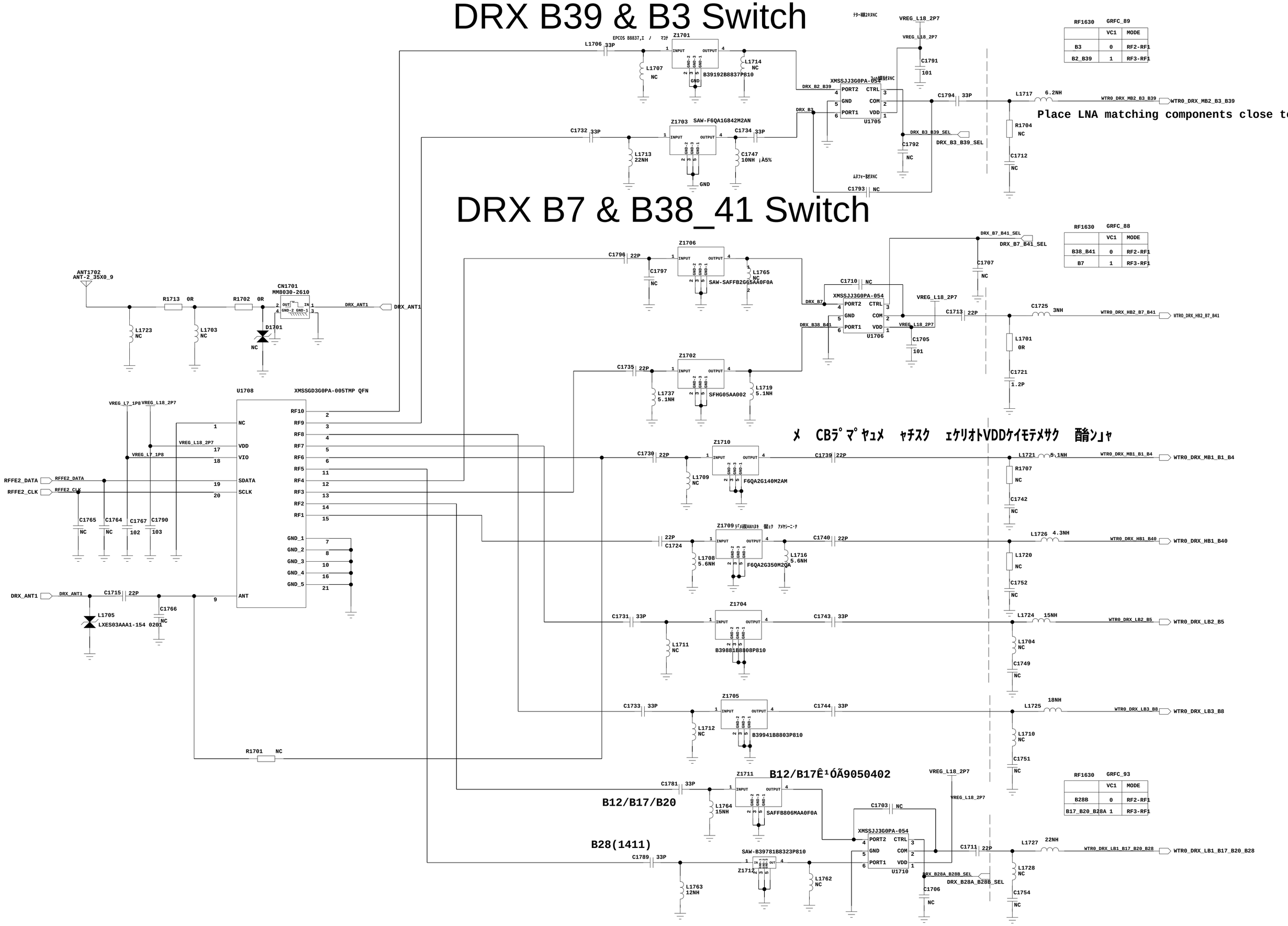

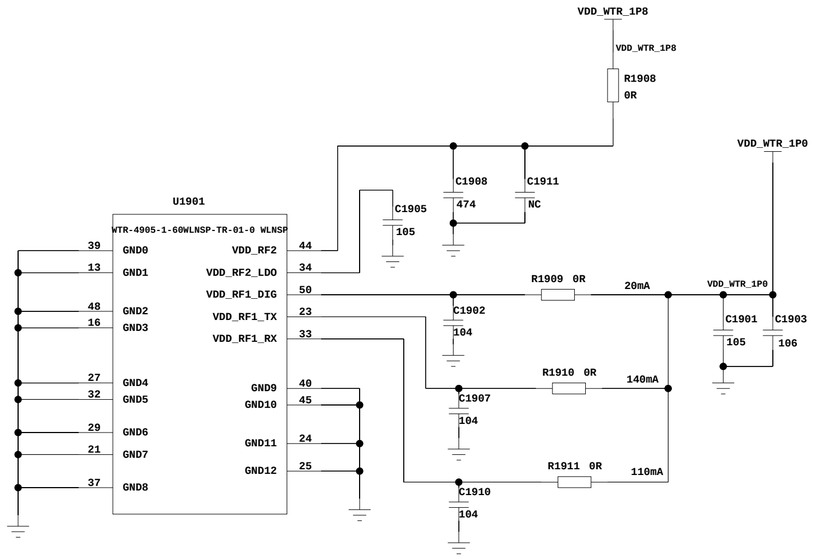
VDD_WTR_1P8
VDD_WTR_1P8
R1908
0R
C1908
474
C1911
NC
C1905
105
VDD_WTR_1P0
U1901
WTR-4905-1-60WLNSP-TR-01-0 WLNSP
39 GND0
13 GND1
48 GND2
16 GND3
27 GND4
32 GND5
29 GND6
21 GND7
37 GND8
44 VDD_RF2
34 VDD_RF2_LDO
50 VDD_RF1_DIG
23 VDD_RF1_TX
33 VDD_RF1_RX
40 GND9
45 GND10
24 GND11
25 GND12
R1909 0R
20mA
VDD_WTR_1P0
C1902
104
C1901
105
C1903
106
R1910 0R
140mA
C1907
104
R1911 0R
110mA
C1910
104

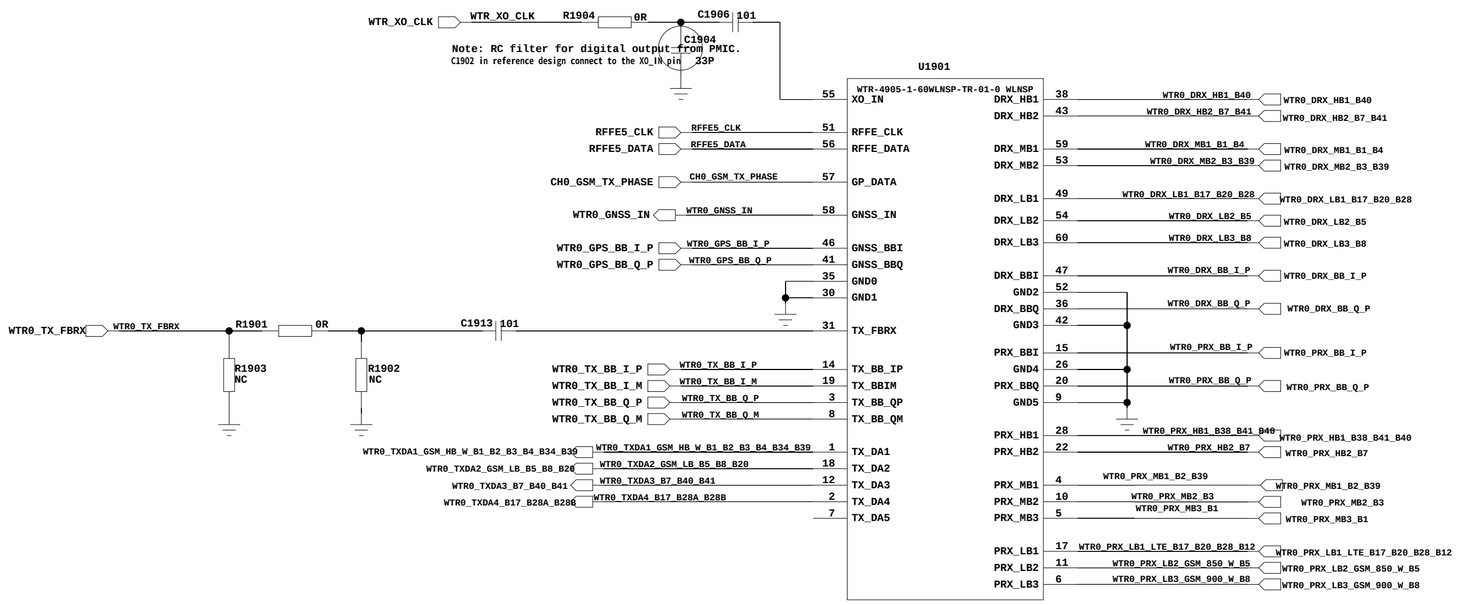
WTR_XO_CLK
WTR_XO_CLK
R1904
0R
C1906
101
C1904
33P
Note: RC filter for digital output from PMIC.
C1902 in reference design connect to the XO_IN pin
U1901
WTR-4905-1-60WLNSP-TR-01-0 WLNSP
55 XO_IN
RFFE5_CLK
RFFE5_CLK
51 RFFE_CLK
RFFE5_DATA
RFFE5_DATA
56 RFFE_DATA
CH0_GSM_TX_PHASE
CH0_GSM_TX_PHASE
57 GP_DATA
WTR0_GNSS_IN
WTR0_GNSS_IN
58 GNSS_IN
WTR0_GPS_BB_I_P
WTR0_GPS_BB_I_P
46 GNSS_BBI
WTR0_GPS_BB_Q_P
WTR0_GPS_BB_Q_P
41 GNSS_BBQ
35 GND0
30 GND1
WTR0_TX_FBRX
WTR0_TX_FBRX
R1901
0R
C1913
101
31 TX_FBRX
R1903
NC
R1902
NC
WTR0_TX_BB_I_P
WTR0_TX_BB_I_P
14 TX_BB_IP
WTR0_TX_BB_I_M
WTR0_TX_BB_I_M
19 TX_BBIM
WTR0_TX_BB_Q_P
WTR0_TX_BB_Q_P
3 TX_BB_QP
WTR0_TX_BB_Q_M
WTR0_TX_BB_Q_M
8 TX_BB_QM
WTR0_TXDA1_GSM_HB_W_B1_B2_B3_B4_B34_B39
WTR0_TXDA1_GSM_HB_W_B1_B2_B3_B4_B34_B39
1 TX_DA1
WTR0_TXDA2_GSM_LB_B5_B8_B20
WTR0_TXDA2_GSM_LB_B5_B8_B20
18 TX_DA2
WTR0_TXDA3_B7_B40_B41
WTR0_TXDA3_B7_B40_B41
12 TX_DA3
WTR0_TXDA4_B17_B28A_B28B
WTR0_TXDA4_B17_B28A_B28B
2 TX_DA4
7 TX_DA5
38 DRX_HB1
WTR0_DRX_HB1_B40
WTR0_DRX_HB1_B40
43 DRX_HB2
WTR0_DRX_HB2_B7_B41
WTR0_DRX_HB2_B7_B41
59 DRX_MB1
WTR0_DRX_MB1_B1_B4
WTR0_DRX_MB1_B1_B4
53 DRX_MB2
WTR0_DRX_MB2_B3_B39
WTR0_DRX_MB2_B3_B39
49 DRX_LB1
WTR0_DRX_LB1_B17_B20_B28
WTR0_DRX_LB1_B17_B20_B28
54 DRX_LB2
WTR0_DRX_LB2_B5
WTR0_DRX_LB2_B5
60 DRX_LB3
WTR0_DRX_LB3_B8
WTR0_DRX_LB3_B8
47 DRX_BBI
WTR0_DRX_BB_I_P
WTR0_DRX_BB_I_P
52 GND2
36 DRX_BBQ
WTR0_DRX_BB_Q_P
WTR0_DRX_BB_Q_P
42 GND3
15 PRX_BBI
WTR0_PRX_BB_I_P
WTR0_PRX_BB_I_P
26 GND4
20 PRX_BBQ
WTR0_PRX_BB_Q_P
WTR0_PRX_BB_Q_P
9 GND5
28 PRX_HB1
WTR0_PRX_HB1_B38_B41_B40
WTR0_PRX_HB1_B38_B41_B40
22 PRX_HB2
WTR0_PRX_HB2_B7
WTR0_PRX_HB2_B7
4 PRX_MB1
WTR0_PRX_MB1_B2_B39
WTR0_PRX_MB1_B2_B39
10 PRX_MB2
WTR0_PRX_MB2_B3
WTR0_PRX_MB2_B3
5 PRX_MB3
WTR0_PRX_MB3_B1
WTR0_PRX_MB3_B1
17 PRX_LB1
WTR0_PRX_LB1_LTE_B17_B20_B28_B12
WTR0_PRX_LB1_LTE_B17_B20_B28_B12
11 PRX_LB2
WTR0_PRX_LB2_GSM_850_W_B5
WTR0_PRX_LB2_GSM_850_W_B5
6 PRX_LB3
WTR0_PRX_LB3_GSM_900_W_B8
WTR0_PRX_LB3_GSM_900_W_B8

Approved By			

GPS+WIFI+BT

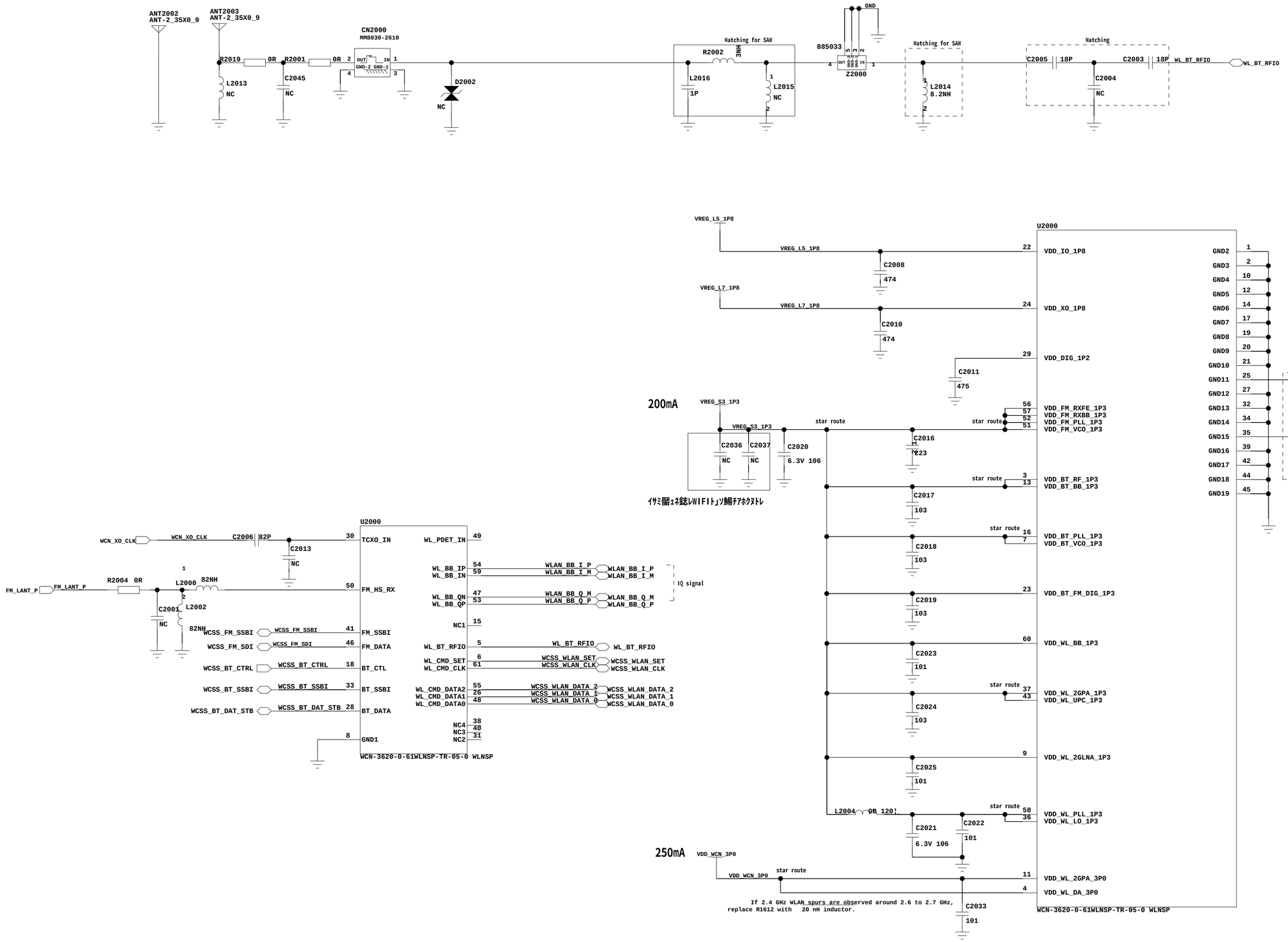

Approved By

Circuit of Ext. Charge

PM8916 CHARGING

PM8916 CHARGING

Pins	Hi Z	GND
OPT_1	No SMB1360	SMB1360 present
OPT_2	No Ext APC buck (S5)	Ext APC buck (S5) present

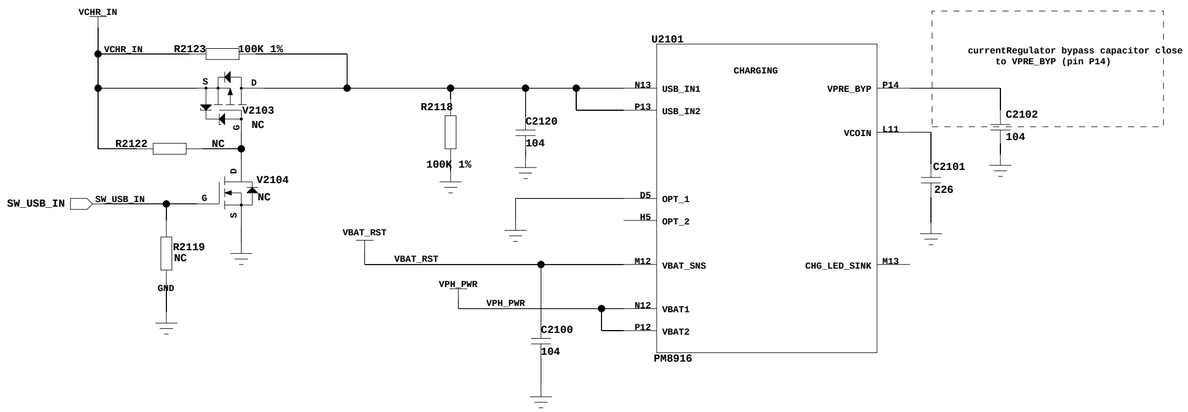

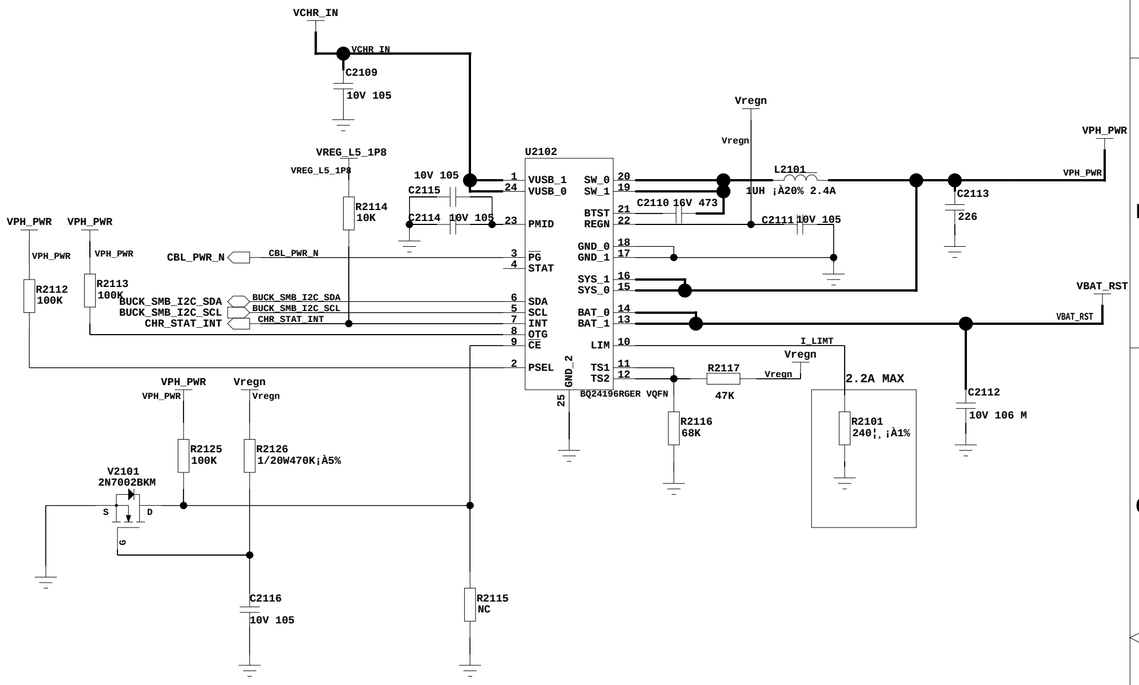

GPIO&MPP

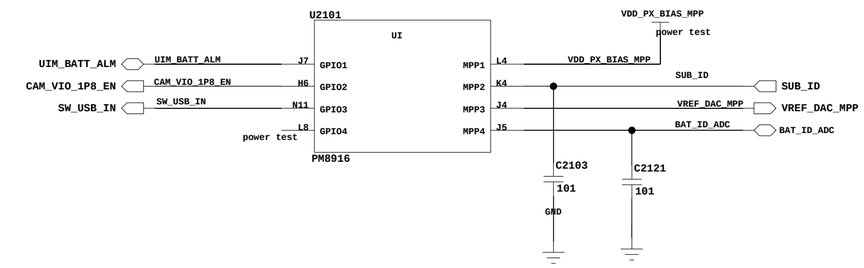

BATT CONNECTOR

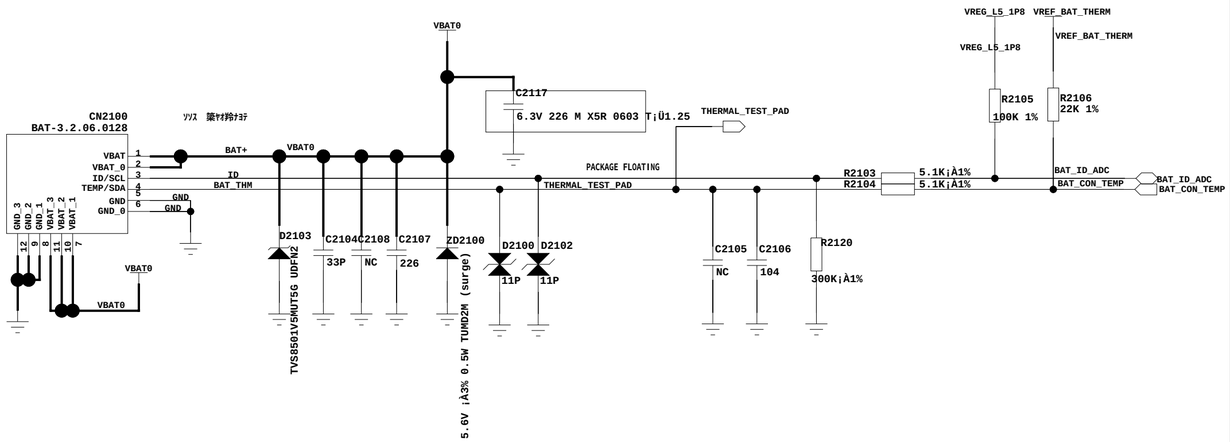

PM8916 GND

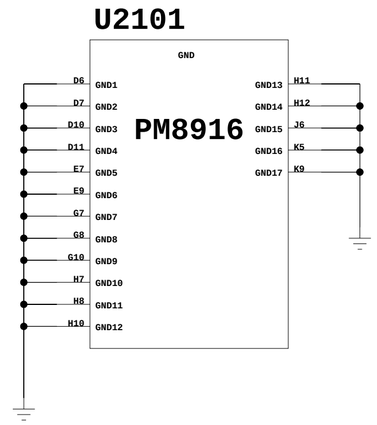

Approved By

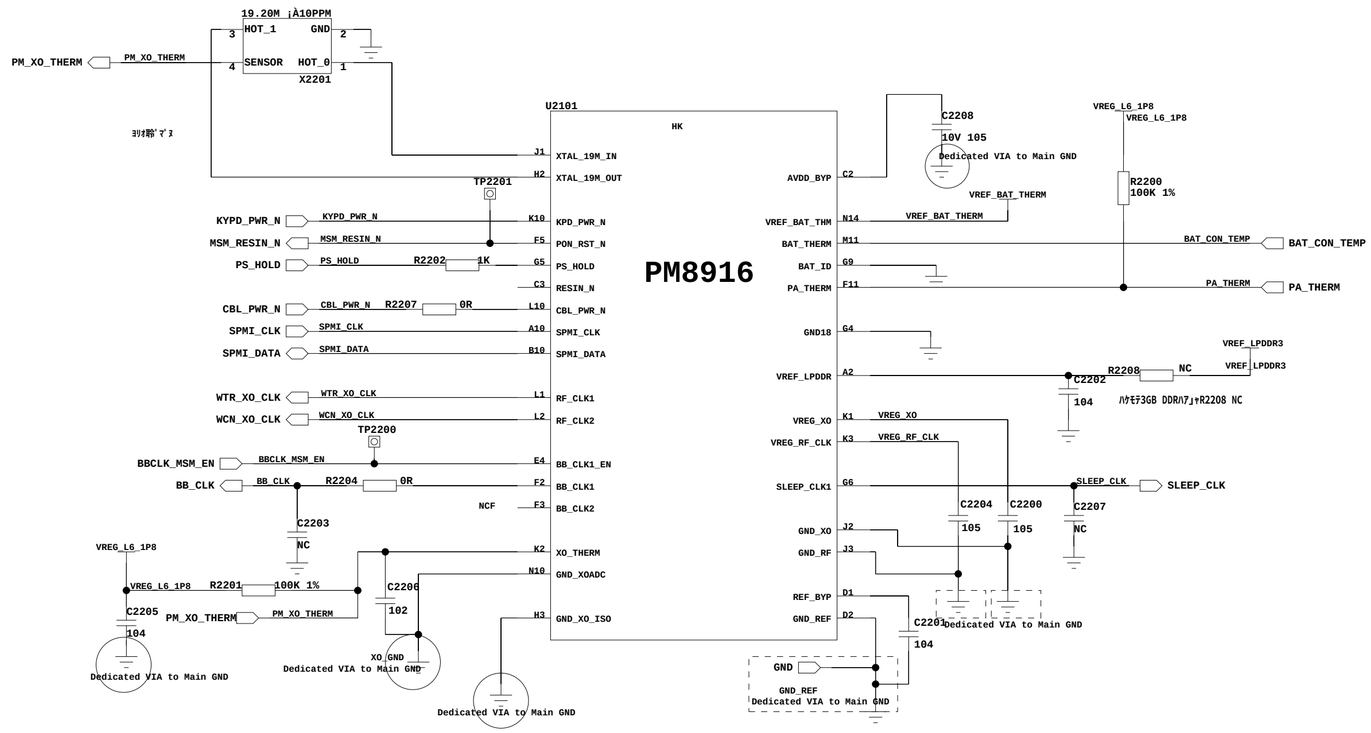
19.20M ¡À10PPM
HOT_1
GND
SENSOR
HOT_0
X2201
PM_XO_THERM
U2101
HK
PM8916
XTAL_19M_IN
XTAL_19M_OUT
TP2201
KYPD_PWR_N
MSM_RESIN_N
PS_HOLD
R2202
1K
RESIN_N
CBL_PWR_N
R2207
0R
SPMI_CLK
SPMI_DATA
WTR_XO_CLK
WCN_XO_CLK
TP2200
BBCLK_MSM_EN
BB_CLK
R2204
NCF
C2203
NC
VREG_L6_1P8
R2201
100K 1%
C2205
104
C2206
102
XO_GND
Dedicated VIA to Main GND
C2208
10V 105
Dedicated VIA to Main GND
R2200
100K 1%
VREF_BAT_THERM
BAT_CON_TEMP
PA_THERM
VREF_LPDDR3
R2208
NC
C2202
104
VREG_XO
VREG_RF_CLK
SLEEP_CLK
C2204
105
C2200
105
C2207
NC
C2201
104
GND
GND_REF

Approved By

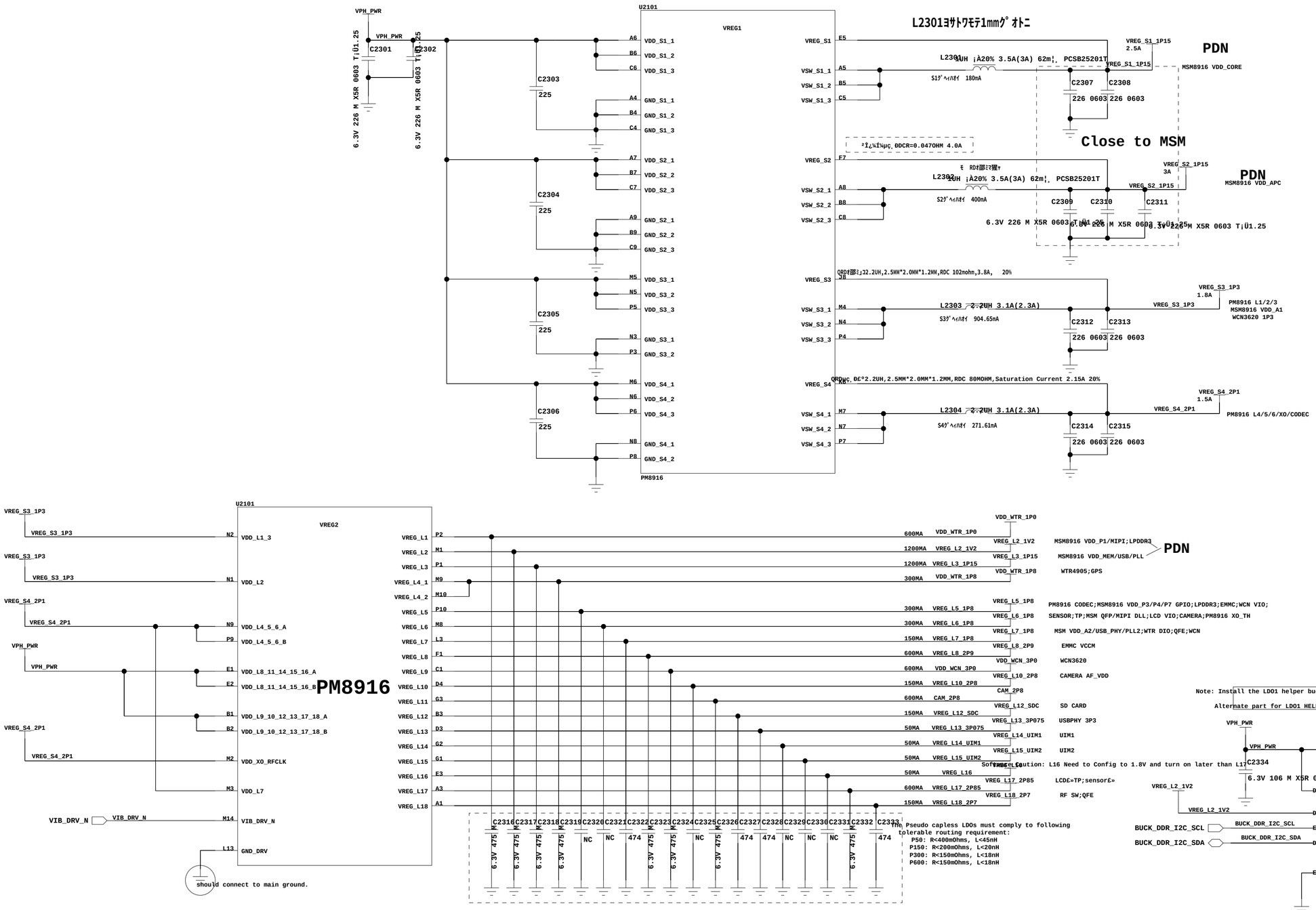
U2101
VREG1
PM8916
VPH_PWR
C2301
C2302
6.3V 226 M X5R 0603 T¡Ú1.25
C2303
C2304
C2305
C2306
225
VDD_S1_1
VDD_S1_2
VDD_S1_3
GND_S1_1
GND_S1_2
GND_S1_3
VDD_S2_1
VDD_S2_2
VDD_S2_3
GND_S2_1
GND_S2_2
GND_S2_3
VDD_S3_1
VDD_S3_2
VDD_S3_3
GND_S3_1
GND_S3_2
VDD_S4_1
VDD_S4_2
VDD_S4_3
GND_S4_1
GND_S4_2
VREG_S1
VSW_S1_1
VSW_S1_2
VSW_S1_3
VREG_S2
VSW_S2_1
VSW_S2_2
VSW_S2_3
VREG_S3
VSW_S3_1
VSW_S3_2
VSW_S3_3
VREG_S4
VSW_S4_1
VSW_S4_2
VSW_S4_3
L2301ÈÝÄÜÄ¿ÈÝ¾ÖÄ¿ÈÝ¾ÖÄ¿ÈÝ¾Ö

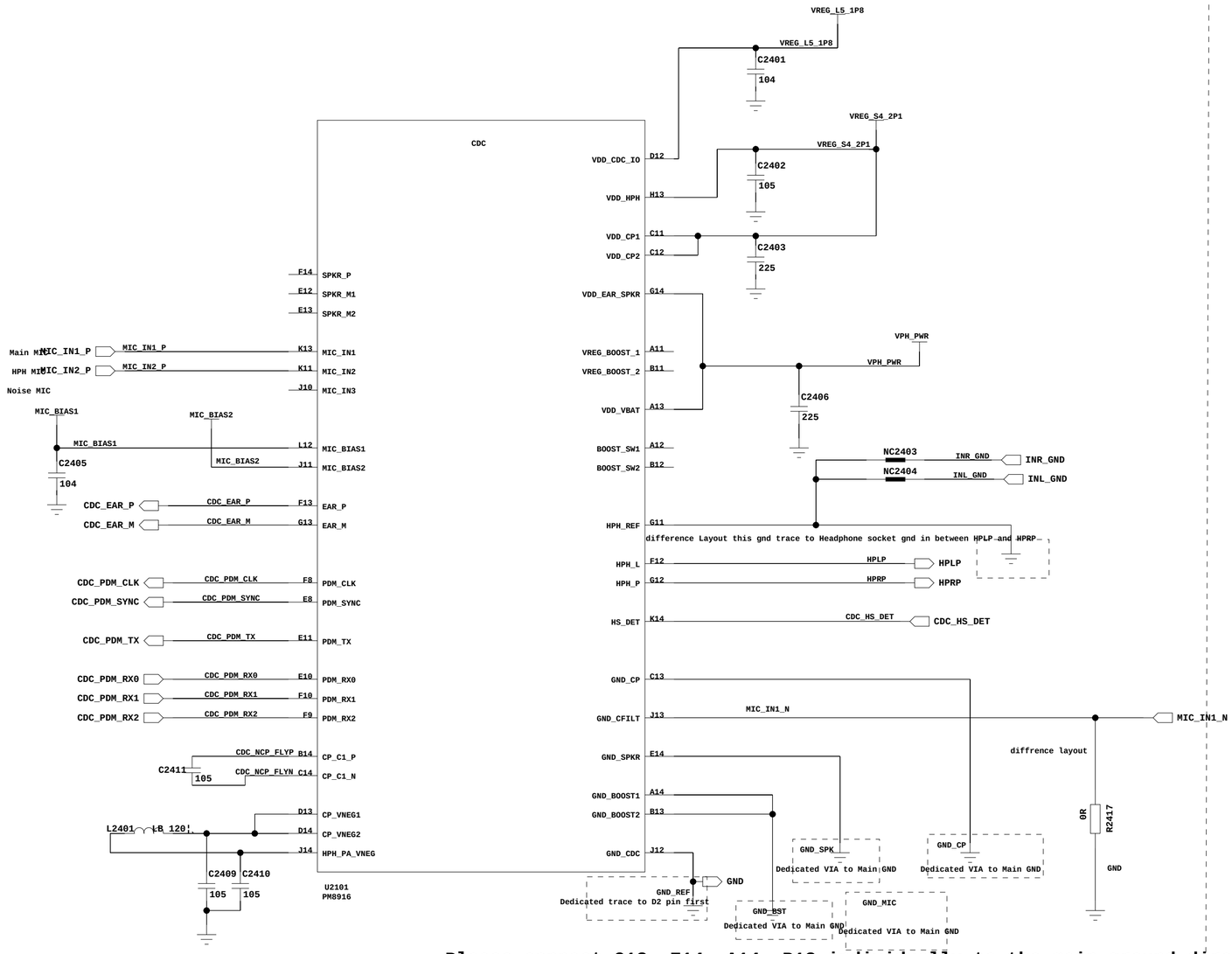

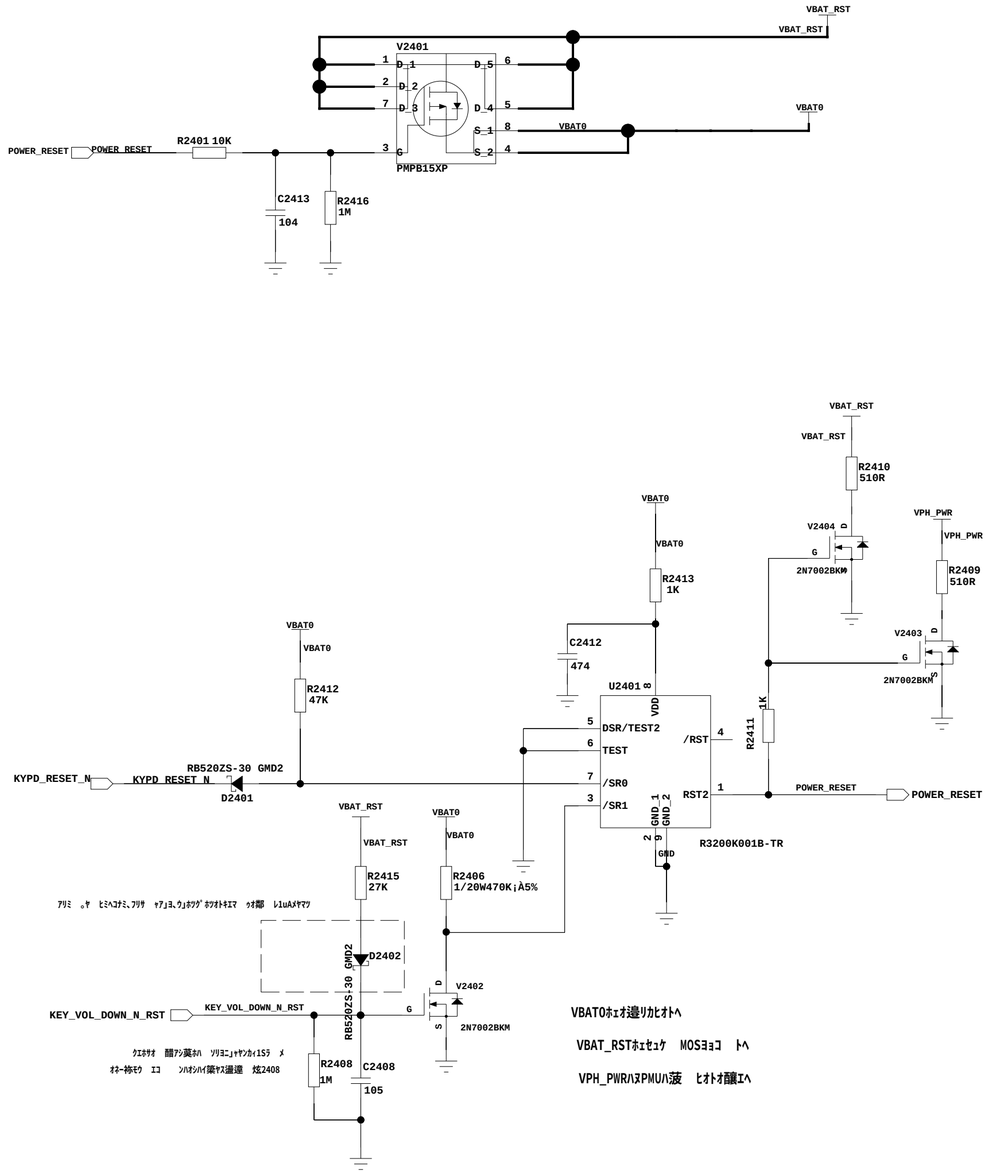

Please connect C13, E14, A14, B13 individually to the main ground directly

ﾗﾟﾏﾟハアメサカｨメェﾗﾟウノイ鋒ヨマﾟミホハス

Approved By

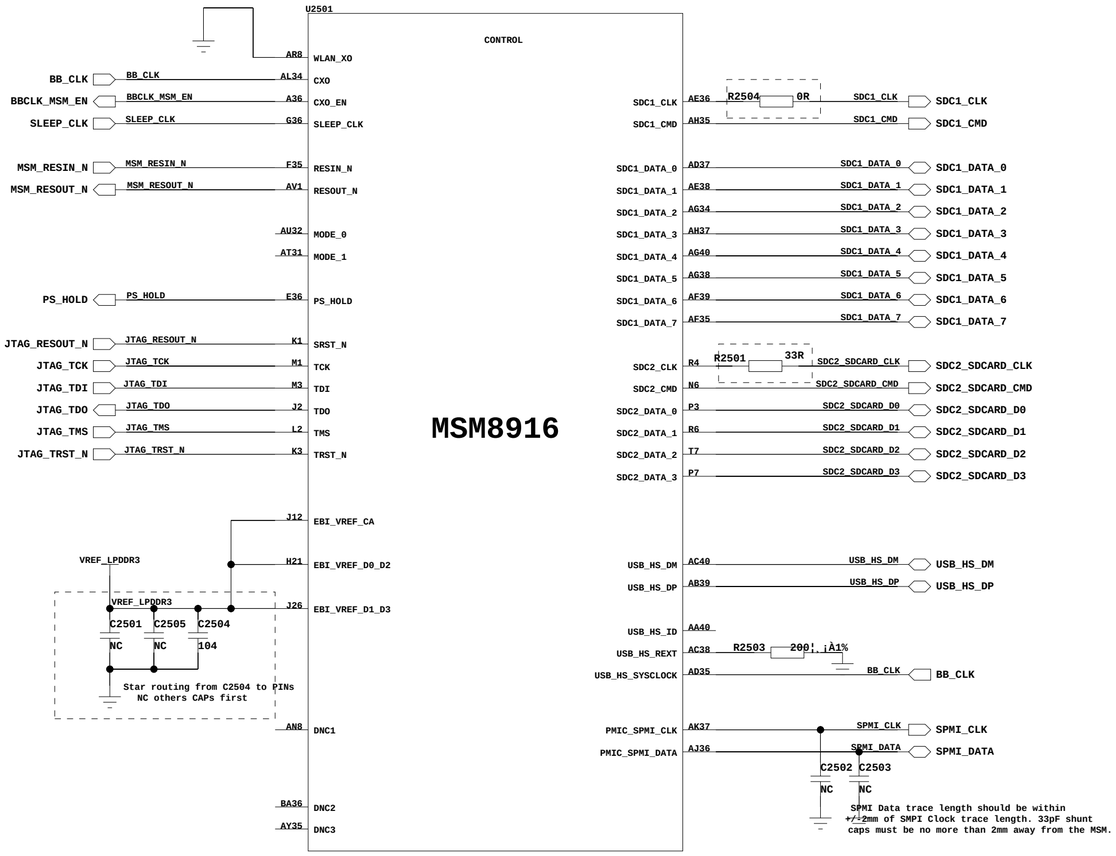
U2501
CONTROL
MSM8916
BB_CLK
BBCLK_MSM_EN
SLEEP_CLK
MSM_RESIN_N
MSM_RESOUT_N
PS_HOLD
JTAG_RESOUT_N
JTAG_TCK
JTAG_TDI
JTAG_TDO
JTAG_TMS
JTAG_TRST_N
VREF_LPDDR3
C2501 C2505 C2504
NC NC 104
Star routing from C2504 to PINs
NC others CAPs first
WLAN_XO
CXO
CXO_EN
SLEEP_CLK
RESIN_N
RESOUT_N
MODE_0
MODE_1
PS_HOLD
SRST_N
TCK
TDI
TDO
TMS
TRST_N
EBI_VREF_CA
EBI_VREF_D0_D2
EBI_VREF_D1_D3
DNC1
DNC2
DNC3
R2504 0R
SDC1_CLK
SDC1_CMD
SDC1_DATA_0
SDC1_DATA_1
SDC1_DATA_2
SDC1_DATA_3
SDC1_DATA_4
SDC1_DATA_5
SDC1_DATA_6
SDC1_DATA_7
R2501 33R
SDC2_CLK
SDC2_CMD
SDC2_SDCARD_CLK
SDC2_SDCARD_CMD
SDC2_SDCARD_D0
SDC2_SDCARD_D1
SDC2_SDCARD_D2
SDC2_SDCARD_D3
USB_HS_DM
USB_HS_DP
USB_HS_ID
USB_HS_REXT
USB_HS_SYSCLOCK
R2503 200¦ ¡À1%
BB_CLK
PMIC_SPMI_CLK
PMIC_SPMI_DATA
SPMI_CLK
SPMI_DATA
C2502 C2503
NC NC
SPMI Data trace length should be within
+/-2mm of SMPI Clock trace length. 33pF shunt
caps must be no more than 2mm away from the MSM.

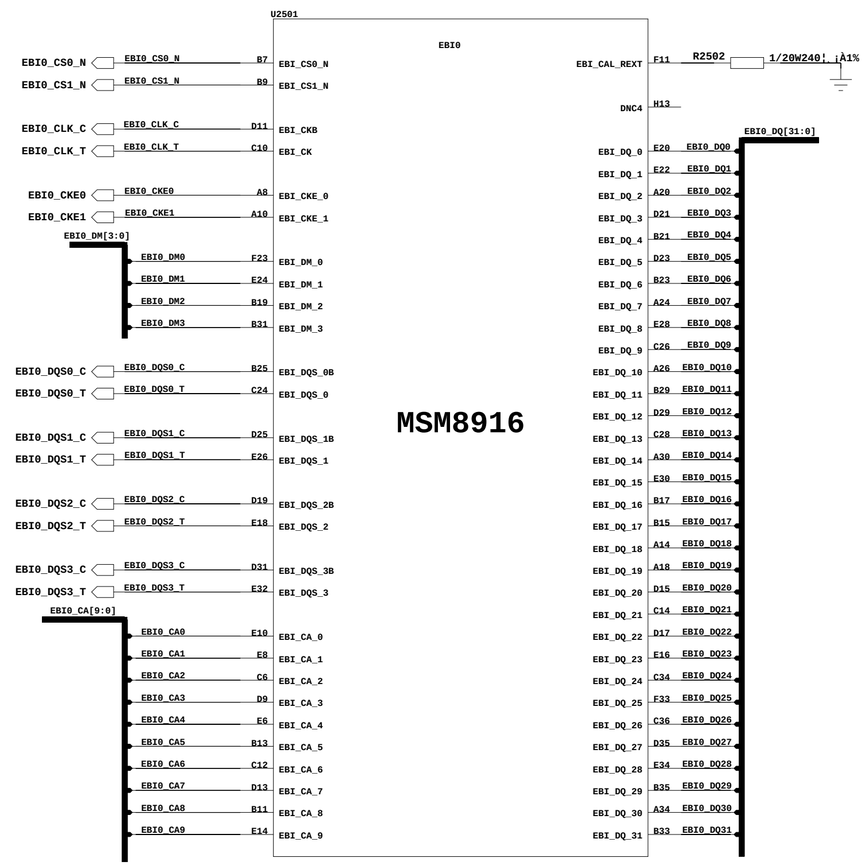
U2501
EBI0
MSM8916
EBI0_CS0_N
EBI0_CS1_N
EBI0_CLK_C
EBI0_CLK_T
EBI0_CKE0
EBI0_CKE1
EBI0_DM[3:0]
EBI0_DQS0_C
EBI0_DQS0_T
EBI0_DQS1_C
EBI0_DQS1_T
EBI0_DQS2_C
EBI0_DQS2_T
EBI0_DQS3_C
EBI0_DQS3_T
EBI0_CA[9:0]
EBI_CAL_REXT
R2502 1/20W240¦ ¡À1%
DNC4
EBI0_DQ[31:0]
EBI_CKB
EBI_CK
EBI_CKE_0
EBI_CKE_1
EBI_DM_0
EBI_DM_1
EBI_DM_2
EBI_DM_3
EBI_DQS_0B
EBI_DQS_0
EBI_DQS_1B
EBI_DQS_1
EBI_DQS_2B
EBI_DQS_2
EBI_DQS_3B
EBI_DQS_3
EBI_CA_0
EBI_CA_1
EBI_CA_2
EBI_CA_3
EBI_CA_4
EBI_CA_5
EBI_CA_6
EBI_CA_7
EBI_CA_8
EBI_CA_9

Approved By

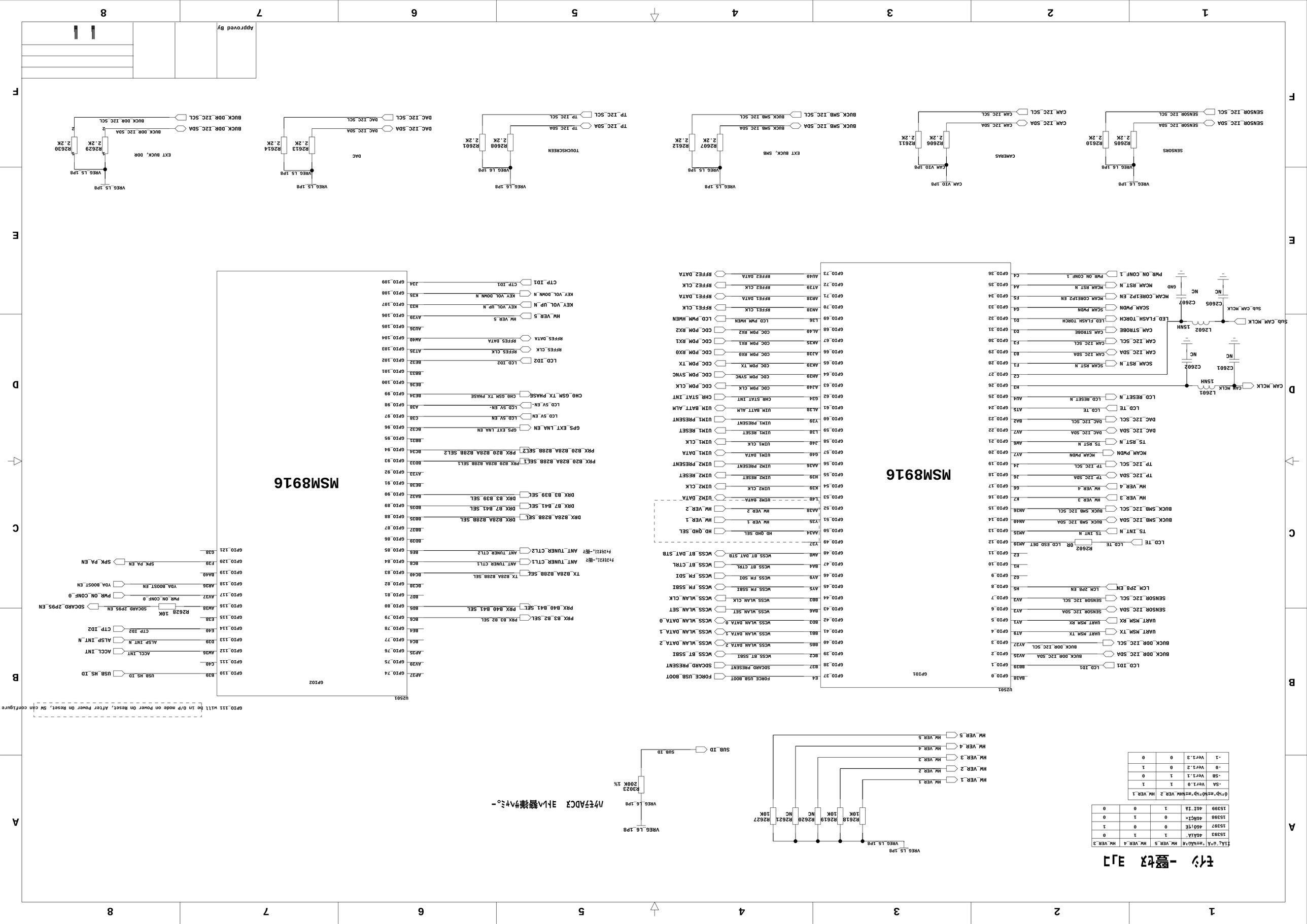
MSM8916
MSM8916
GPIO1
GPIO2
U2501
U2501
CAM_MCLK
Sub_CAM_MCLK
LCD_ID1
BUCK_DDR_I2C_SDA
BUCK_DDR_I2C_SCL
UART_MSM_TX
UART_MSM_RX
SENSOR_I2C_SDA
SENSOR_I2C_SCL
LCM_2P8_EN
LCD_TE
BUCK_SMB_I2C_SDA
BUCK_SMB_I2C_SCL
HW_VER_4
HW_VER_3
TP_I2C_SDA
TP_I2C_SCL
TS_INT_N
HW_VER_1
HW_VER_2
HW_VER_5
MCAM_PWDN
TS_RST_N
DAC_I2C_SDA
DAC_I2C_SCL
LCD_TE
LCD_RESET_N
SCAM_RST_N
CAM_I2C_SDA
CAM_I2C_SCL
CAM_STROBE
LED_FLASH_TORCH
SCAM_PWDN
MCAM_CORE1P2_EN
MCAM_CORE2P2_EN
MCAM_RST_N
PWR_ON_CONF_1
FORCE_USB_BOOT
SDCARD_PRESENT
WCSS_BT_SSBI
WCSS_FM_SSBI
WCSS_FM_SDI
WCSS_BT_CTRL
WCSS_BT_DAT_STB
HD_QHD_SEL
UIM2_CLK
UIM2_RESET
UIM2_PRESENT
UIM2_DATA
UIM1_CLK
UIM1_RESET
UIM1_PRESENT
UIM1_DATA
UIM_BATT_ALM
CHR_STAT_INT
CDC_PDM_CLK
CDC_PDM_SYNC
CDC_PDM_TX
CDC_PDM_RX0
CDC_PDM_RX1
CDC_PDM_RX2
LCD_PWM_HWEN
RFFE1_CLK
RFFE1_DATA
RFFE2_CLK
RFFE2_DATA
WCSS_WLAN_DATA_0
WCSS_WLAN_DATA_1
WCSS_WLAN_DATA_2
WCSS_WLAN_SET
WCSS_WLAN_CLK
LCD_ID2
RFFE5_CLK
RFFE5_DATA
HW_VER_5
KEY_VOL_UP_N
KEY_VOL_DOWN_N
CTP_ID1
CTP_ID2
USB_HS_ID
ACCL_INT
ALSP_INT_N
SPK_PA_EN
SDCARD_2P95_EN
PWR_ON_CONF_0
VDA_BOOST_EN
TX_B28A_B28B_SEL
PRX_B3_B2_SEL
PRX_B40_B41_SEL
DRX_B28A_B28B_SEL
DRX_B7_B41_SEL
DRX_B3_B39_SEL
PRX_B20_B28A_B28B_SEL1
PRX_B20_B28A_B28B_SEL2
GPS_EXT_LNA_EN
LCD_SV_EN
LCD_SV_EN-
CH0_GSM_TX_PHASE
GPIO_111 will be in O/P mode on Power On Reset, After Power on Reset, SW can configure
VREG_L5_1P8
VREG_L6_1P8
CAM_VIO_1P8
EXT BUCK, SMB
EXT BUCK, DDR
TOUCHSCREEN
CAMERAS
SENSORS
DAC
R2605 2.2K
R2606 2.2K
R2607 2.2K
R2608 2.2K
R2610 2.2K
R2611 2.2K
R2612 2.2K
R2613 2.2K
R2614 2.2K
R2629 2.2K
R2630 2.2K
R2601 2.2K
R2602 0R
R2628 10K
R2618 10K
R2619 10K
R2620 NC
R2621 NC
R2627 10K
R3023 200K 1%
L2601 15NH
L2602 15NH
C2601 NC
C2602 NC
C2605 NC
C2607 NC
GND
ハイフADCス 3トレン警準ハイミ。-
ﾁｪｯｸ -聖ｾｽ 3J2
ﾕﾆｯﾄ°#%ｶ°ｾ%ｶ°#%HW_VER_5 HW_VER_4 HW_VER_3
15393 46A1A 1 1 0
15397 46ﾊﾟE 0 0 1
15398 46ﾊCI« 0 1 0
15399 46ﾊ1A 1 0 0
0%ｶ°#%ｶ°ｾ%ｶ°#%HW_VER_2 HW_VER_1
-SA Ver1.0 1 1
-SB Ver1.1 1 0
-0 Ver1.2 0 1
-1 Ver1.3 0 0
Approved By

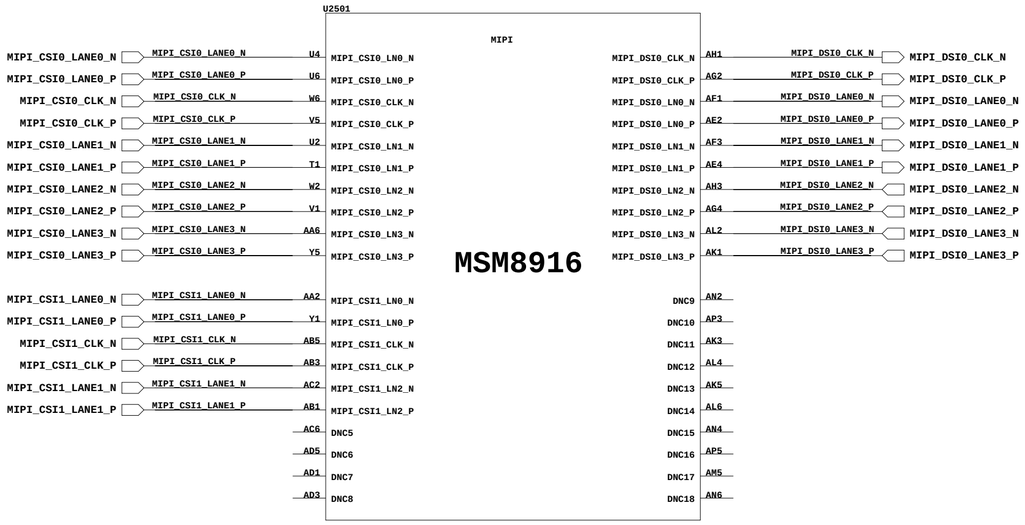
U2501
MIPI
MSM8916
MIPI_CSI0_LANE0_N
MIPI_CSI0_LANE0_P
MIPI_CSI0_CLK_N
MIPI_CSI0_CLK_P
MIPI_CSI0_LANE1_N
MIPI_CSI0_LANE1_P
MIPI_CSI0_LANE2_N
MIPI_CSI0_LANE2_P
MIPI_CSI0_LANE3_N
MIPI_CSI0_LANE3_P
MIPI_CSI1_LANE0_N
MIPI_CSI1_LANE0_P
MIPI_CSI1_CLK_N
MIPI_CSI1_CLK_P
MIPI_CSI1_LANE1_N
MIPI_CSI1_LANE1_P
U4 U6 W6 V5 U2 T1 W2 V1 AA6 Y5
AA2 Y1 AB5 AB3 AC2 AB1
MIPI_CSI0_LN0_N
MIPI_CSI0_LN0_P
MIPI_CSI0_CLK_N
MIPI_CSI0_CLK_P
MIPI_CSI0_LN1_N
MIPI_CSI0_LN1_P
MIPI_CSI0_LN2_N
MIPI_CSI0_LN2_P
MIPI_CSI0_LN3_N
MIPI_CSI0_LN3_P
MIPI_CSI1_LN0_N
MIPI_CSI1_LN0_P
MIPI_CSI1_CLK_N
MIPI_CSI1_CLK_P
MIPI_CSI1_LN2_N
MIPI_CSI1_LN2_P
DNC5 AC6
DNC6 AD5
DNC7 AD1
DNC8 AD3
MIPI_DSI0_CLK_N
MIPI_DSI0_CLK_P
MIPI_DSI0_LN0_N
MIPI_DSI0_LN0_P
MIPI_DSI0_LN1_N
MIPI_DSI0_LN1_P
MIPI_DSI0_LN2_N
MIPI_DSI0_LN2_P
MIPI_DSI0_LN3_N
MIPI_DSI0_LN3_P
AH1 AG2 AF1 AE2 AF3 AE4 AH3 AG4 AL2 AK1
MIPI_DSI0_CLK_N
MIPI_DSI0_CLK_P
MIPI_DSI0_LANE0_N
MIPI_DSI0_LANE0_P
MIPI_DSI0_LANE1_N
MIPI_DSI0_LANE1_P
MIPI_DSI0_LANE2_N
MIPI_DSI0_LANE2_P
MIPI_DSI0_LANE3_N
MIPI_DSI0_LANE3_P
DNC9 AN2
DNC10 AP3
DNC11 AK3
DNC12 AL4
DNC13 AK5
DNC14 AL6
DNC15 AN4
DNC16 AP5
DNC17 AM5
DNC18 AN6

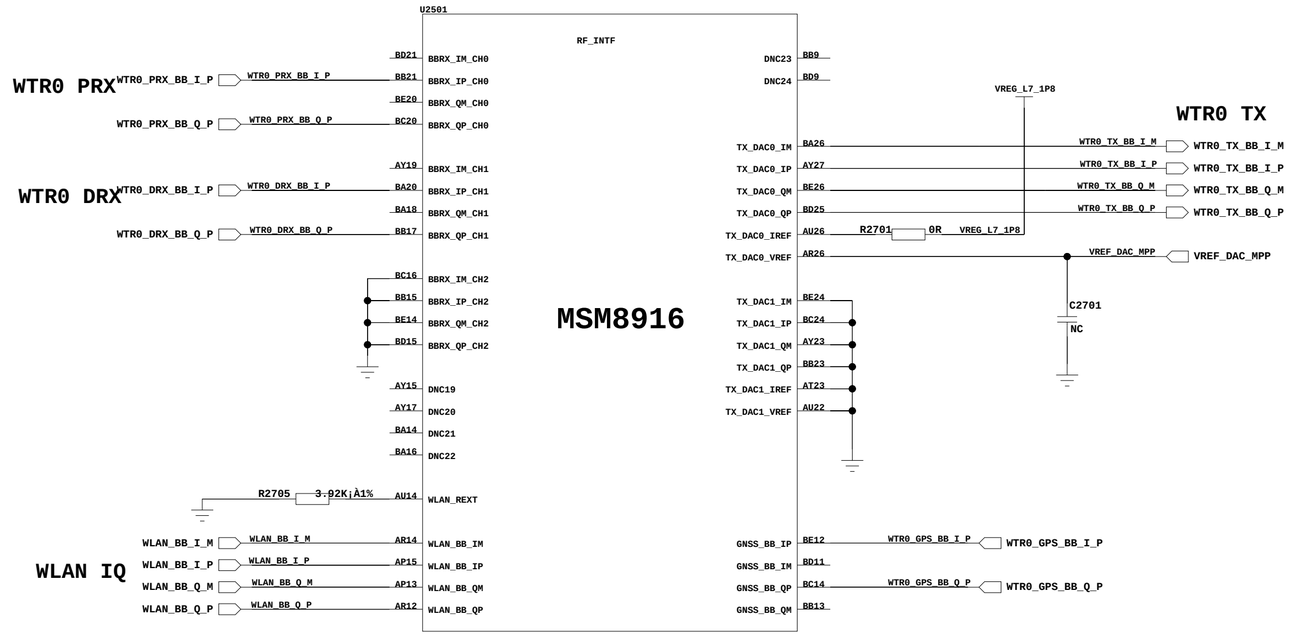
U2501
RF_INTF
MSM8916
WTR0 PRX
WTR0 DRX
WLAN IQ
WTR0 TX
WTR0_PRX_BB_I_P
WTR0_PRX_BB_Q_P
WTR0_DRX_BB_I_P
WTR0_DRX_BB_Q_P
BD21 BB21 BE20 BC20 AY19 BA20 BA18 BB17
BBRX_IM_CH0
BBRX_IP_CH0
BBRX_QM_CH0
BBRX_QP_CH0
BBRX_IM_CH1
BBRX_IP_CH1
BBRX_QM_CH1
BBRX_QP_CH1
BC16 BB15 BE14 BD15
BBRX_IM_CH2
BBRX_IP_CH2
BBRX_QM_CH2
BBRX_QP_CH2
AY15 AY17 BA14 BA16
DNC19
DNC20
DNC21
DNC22
R2705 3.92K¡À1%
AU14
WLAN_REXT
WLAN_BB_I_M
WLAN_BB_I_P
WLAN_BB_Q_M
WLAN_BB_Q_P
AR14 AP15 AP13 AR12
WLAN_BB_IM
WLAN_BB_IP
WLAN_BB_QM
WLAN_BB_QP
DNC23 BB9
DNC24 BD9
VREG_L7_1P8
TX_DAC0_IM BA26
TX_DAC0_IP AY27
TX_DAC0_QM BE26
TX_DAC0_QP BD25
TX_DAC0_IREF AU26
TX_DAC0_VREF AR26
R2701 0R VREG_L7_1P8
WTR0_TX_BB_I_M
WTR0_TX_BB_I_P
WTR0_TX_BB_Q_M
WTR0_TX_BB_Q_P
WTR0_TX_BB_I_M
WTR0_TX_BB_I_P
WTR0_TX_BB_Q_M
WTR0_TX_BB_Q_P
VREF_DAC_MPP
VREF_DAC_MPP
C2701
NC
TX_DAC1_IM BE24
TX_DAC1_IP BC24
TX_DAC1_QM AY23
TX_DAC1_QP BB23
TX_DAC1_IREF AT23
TX_DAC1_VREF AU22
GNSS_BB_IP BE12
GNSS_BB_IM BD11
GNSS_BB_QP BC14
GNSS_BB_QM BB13
WTR0_GPS_BB_I_P
WTR0_GPS_BB_Q_P
WTR0_GPS_BB_I_P
WTR0_GPS_BB_Q_P

Approved By

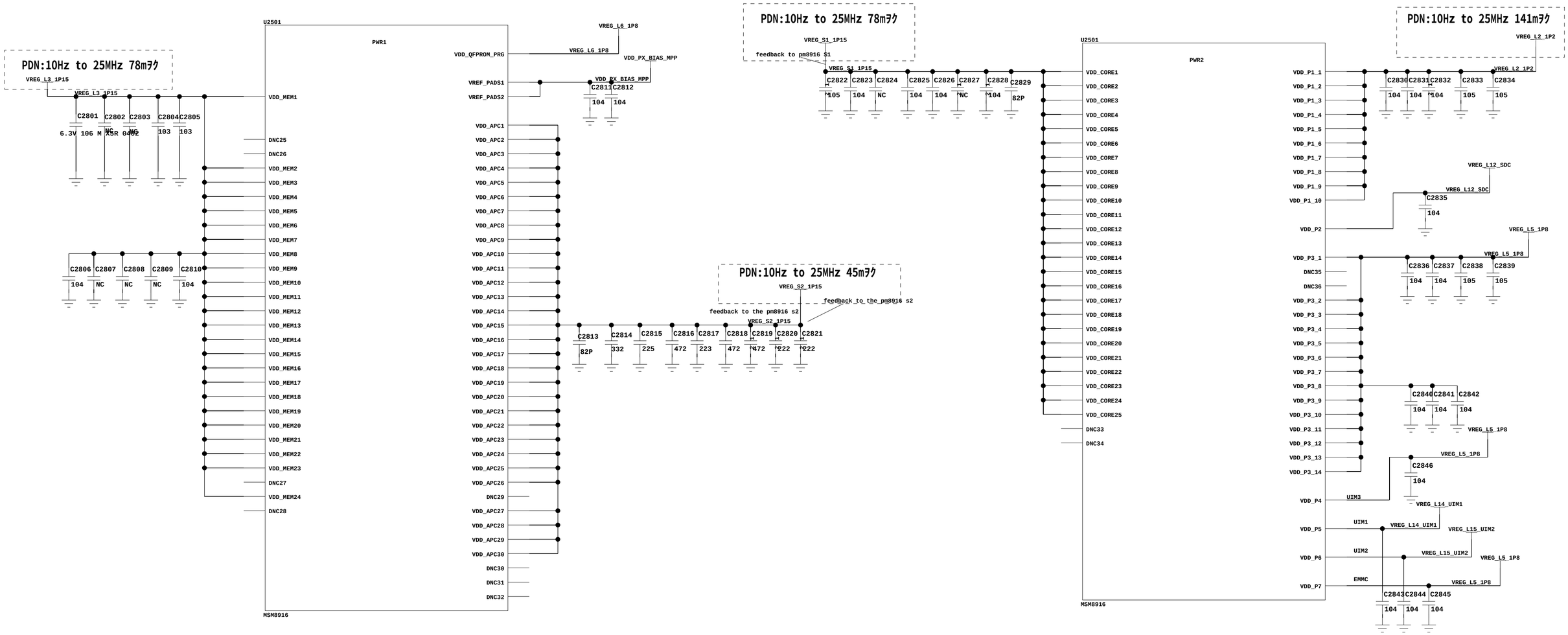
PDN:10Hz to 25MHz 78mヲ
VREG_L3_1P15
C2801 C2802 C2803 C2804 C2805
6.3V 106 M X5R 0402
103 103
C2806 C2807 C2808 C2809 C2810
104 NC NC NC 104
U2501
PWR1
MSM8916
VDD_MEM1
DNC25
DNC26
VDD_MEM2
VDD_MEM3
VDD_MEM4
VDD_MEM5
VDD_MEM6
VDD_MEM7
VDD_MEM8
VDD_MEM9
VDD_MEM10
VDD_MEM11
VDD_MEM12
VDD_MEM13
VDD_MEM14
VDD_MEM15
VDD_MEM16
VDD_MEM17
VDD_MEM18
VDD_MEM19
VDD_MEM20
VDD_MEM21
VDD_MEM22
VDD_MEM23
DNC27
VDD_MEM24
DNC28
VDD_QFPROM_PRG
VREG_L6_1P8
VDD_PX_BIAS_MPP
VREF_PADS1
VREF_PADS2
C2811 C2812
104 104
VDD_APC1
VDD_APC2
VDD_APC3
VDD_APC4
VDD_APC5
VDD_APC6
VDD_APC7
VDD_APC8
VDD_APC9
VDD_APC10
VDD_APC11
VDD_APC12
VDD_APC13
VDD_APC14
VDD_APC15
VDD_APC16
VDD_APC17
VDD_APC18
VDD_APC19
VDD_APC20
VDD_APC21
VDD_APC22
VDD_APC23
VDD_APC24
VDD_APC25
VDD_APC26
DNC29
VDD_APC27
VDD_APC28
VDD_APC29
VDD_APC30
DNC30
DNC31
DNC32
PDN:10Hz to 25MHz 45mヲ
VREG_S2_1P15
feedback to the pm8916 s2
C2813 C2814 C2815 C2816 C2817 C2818 C2819 C2820 C2821
82P 332 225 472 223 472 472 222 222
PDN:10Hz to 25MHz 78mヲ
VREG_S1_1P15
feedback to pm8916 S1
C2822 C2823 C2824 C2825 C2826 C2827 C2828 C2829
105 104 NC 104 104 NC 104 82P
U2501
PWR2
MSM8916
VDD_CORE1
VDD_CORE2
VDD_CORE3
VDD_CORE4
VDD_CORE5
VDD_CORE6
VDD_CORE7
VDD_CORE8
VDD_CORE9
VDD_CORE10
VDD_CORE11
VDD_CORE12
VDD_CORE13
VDD_CORE14
VDD_CORE15
VDD_CORE16
VDD_CORE17
VDD_CORE18
VDD_CORE19
VDD_CORE20
VDD_CORE21
VDD_CORE22
VDD_CORE23
VDD_CORE24
VDD_CORE25
DNC33
DNC34
PDN:10Hz to 25MHz 141mヲ
VREG_L2_1P2
C2830 C2831 C2832 C2833 C2834
104 104 104 105 105
VREG_L12_SDC
C2835
104
VDD_P1_1
VDD_P1_2
VDD_P1_3
VDD_P1_4
VDD_P1_5
VDD_P1_6
VDD_P1_7
VDD_P1_8
VDD_P1_9
VDD_P1_10
VDD_P2
VREG_L5_1P8
VDD_P3_1
DNC35
DNC36
VDD_P3_2
VDD_P3_3
VDD_P3_4
VDD_P3_5
VDD_P3_6
VDD_P3_7
VDD_P3_8
VDD_P3_9
VDD_P3_10
VDD_P3_11
VDD_P3_12
VDD_P3_13
VDD_P3_14
C2836 C2837 C2838 C2839
104 104 105 105
C2840 C2841 C2842
104 104 104
C2846
104
VDD_P4
UIM3
VREG_L14_UIM1
VDD_P5
UIM1
VREG_L15_UIM2
VDD_P6
UIM2
VDD_P7
EMMC
C2843 C2844 C2845
104 104 104

Approved By

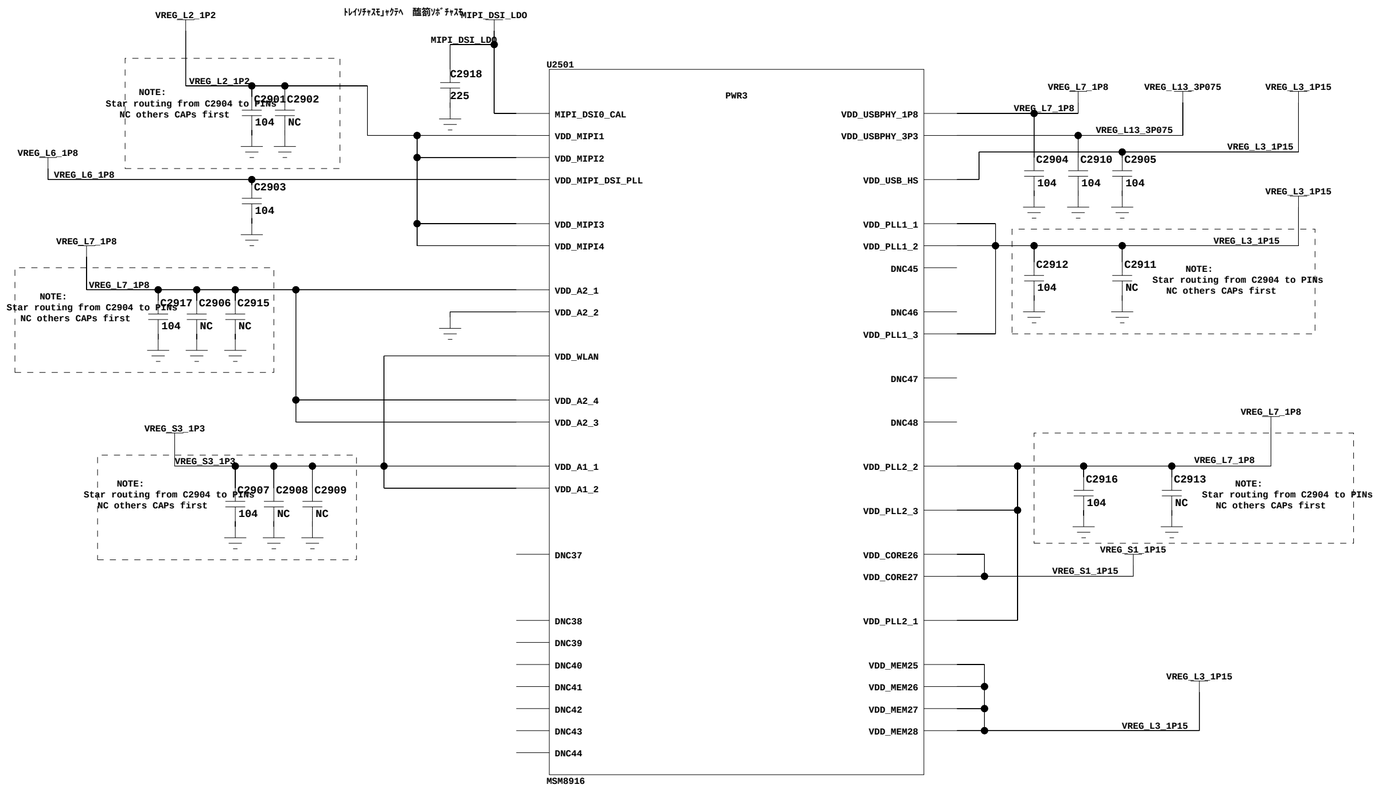
VREG_L2_1P2
NOTE:
Star routing from C2904 to PINs
NC others CAPs first
C2901
C2902
104
NC
VREG_L6_1P8
C2903
104
VREG_L7_1P8
C2917
C2906
C2915
VREG_S3_1P3
C2907
C2908
C2909
MIPI_DSI_LDO
C2918
225
U2501
PWR3
MIPI_DSI0_CAL
VDD_MIPI1
VDD_MIPI2
VDD_MIPI_DSI_PLL
VDD_MIPI3
VDD_MIPI4
VDD_A2_1
VDD_A2_2
VDD_WLAN
VDD_A2_4
VDD_A2_3
VDD_A1_1
VDD_A1_2
DNC37
DNC38
DNC39
DNC40
DNC41
DNC42
DNC43
DNC44
MSM8916
VDD_USBPHY_1P8
VDD_USBPHY_3P3
VDD_USB_HS
VDD_PLL1_1
VDD_PLL1_2
DNC45
DNC46
VDD_PLL1_3
DNC47
DNC48
VDD_PLL2_2
VDD_PLL2_3
VDD_CORE26
VDD_CORE27
VDD_PLL2_1
VDD_MEM25
VDD_MEM26
VDD_MEM27
VDD_MEM28
VREG_L7_1P8
VREG_L13_3P075
VREG_L3_1P15
C2904
C2910
C2905
C2912
C2911
C2916
C2913
VREG_S1_1P15

Approved By

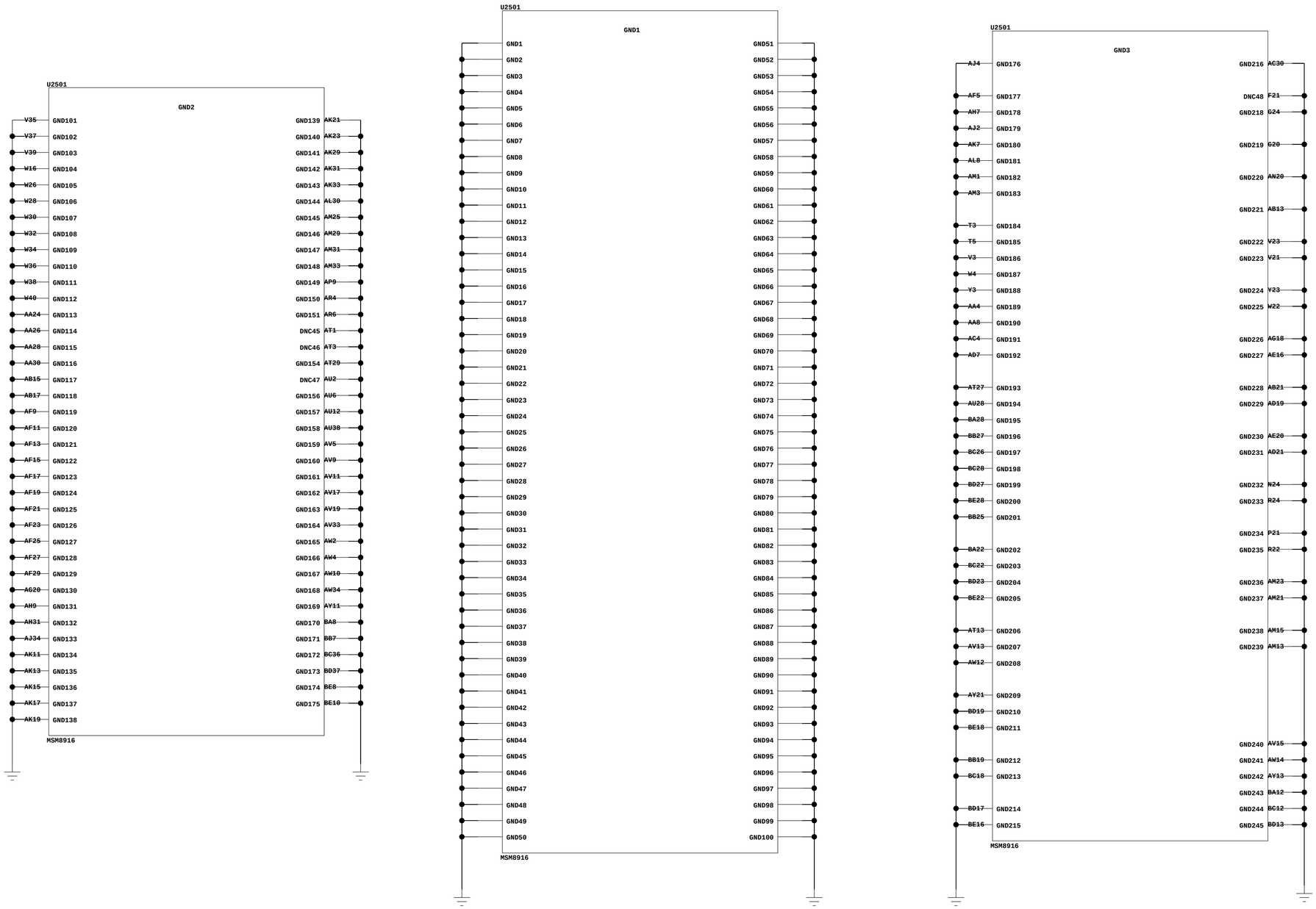
U2501
GND2
V35 GND101
V37 GND102
V39 GND103
W16 GND104
W26 GND105
W28 GND106
W30 GND107
W32 GND108
W34 GND109
W36 GND110
W38 GND111
W40 GND112
AA24 GND113
AA26 GND114
AA28 GND115
AA30 GND116
AB15 GND117
AB17 GND118
AF9 GND119
AF11 GND120
AF13 GND121
AF15 GND122
AF17 GND123
AF19 GND124
AF21 GND125
AF23 GND126
AF25 GND127
AF27 GND128
AF29 GND129
AG20 GND130
AH9 GND131
AH31 GND132
AJ34 GND133
AK11 GND134
AK13 GND135
AK15 GND136
AK17 GND137
AK19 GND138
GND139 AK21
GND140 AK23
GND141 AK29
GND142 AK31
GND143 AK33
GND144 AL30
GND145 AM25
GND146 AM29
GND147 AM31
GND148 AM33
GND149 AP9
GND150 AR4
GND151 AR6
DNC45 AT1
DNC46 AT3
GND154 AT29
DNC47 AU2
GND156 AU6
GND157 AU12
GND158 AU38
GND159 AV5
GND160 AV9
GND161 AV11
GND162 AV17
GND163 AV19
GND164 AV33
GND165 AW2
GND166 AW4
GND167 AW10
GND168 AW34
GND169 AY11
GND170 BA8
GND171 BB7
GND172 BC36
GND173 BD37
GND174 BE8
GND175 BE10
MSM8916
U2501
GND1
GND1 GND51
GND2 GND52
GND3 GND53
GND4 GND54
GND5 GND55
GND6 GND56
GND7 GND57
GND8 GND58
GND9 GND59
GND10 GND60
GND11 GND61
GND12 GND62
GND13 GND63
GND14 GND64
GND15 GND65
GND16 GND66
GND17 GND67
GND18 GND68
GND19 GND69
GND20 GND70
GND21 GND71
GND22 GND72
GND23 GND73
GND24 GND74
GND25 GND75
GND26 GND76
GND27 GND77
GND28 GND78
GND29 GND79
GND30 GND80
GND31 GND81
GND32 GND82
GND33 GND83
GND34 GND84
GND35 GND85
GND36 GND86
GND37 GND87
GND38 GND88
GND39 GND89
GND40 GND90
GND41 GND91
GND42 GND92
GND43 GND93
GND44 GND94
GND45 GND95
GND46 GND96
GND47 GND97
GND48 GND98
GND49 GND99
GND50 GND100
MSM8916
U2501
GND3
AJ4 GND176
AF5 GND177
AH7 GND178
AJ2 GND179
AK7 GND180
AL8 GND181
AM1 GND182
AM3 GND183
T3 GND184
T5 GND185
V3 GND186
W4 GND187
Y3 GND188
AA4 GND189
AA8 GND190
AC4 GND191
AD7 GND192
AT27 GND193
AU28 GND194
BA28 GND195
BB27 GND196
BC26 GND197
BC28 GND198
BD27 GND199
BE28 GND200
BB25 GND201
BA22 GND202
BC22 GND203
BD23 GND204
BE22 GND205
AT13 GND206
AV13 GND207
AW12 GND208
AY21 GND209
BD19 GND210
BE18 GND211
BB19 GND212
BC18 GND213
BD17 GND214
BE16 GND215
GND216 AC30
DNC48 F21
GND218 G24
GND219 G20
GND220 AN20
GND221 AB13
GND222 V23
GND223 V21
GND224 Y23
GND225 W22
GND226 AG18
GND227 AE16
GND228 AB21
GND229 AD19
GND230 AE20
GND231 AD21
GND232 N24
GND233 R24
GND234 P21
GND235 R22
GND236 AM23
GND237 AM21
GND238 AM15
GND239 AM13
GND240 AV15
GND241 AW14
GND242 AY13
GND243 BA12
GND244 BC12
GND245 BD13
MSM8916
U2501
NC_DNC
NC1 NC24
NC2 NC25
NC3 NC26
NC4 NC27
NC5 NC28
NC6 NC29
NC7 NC30
NC8 NC31
NC9 NC32
NC10 NC33
NC11 NC34
NC12 NC35
NC13 NC36
internal connection
MIPI_DSI_LDO NC37
NC15 NC38
NC16 NC39
NC17 NC40
NC18 NC41
NC19 NC42
NC20 NC43
NC21 NC44
NC22 NC45
NC23
MSM8916

Approved By

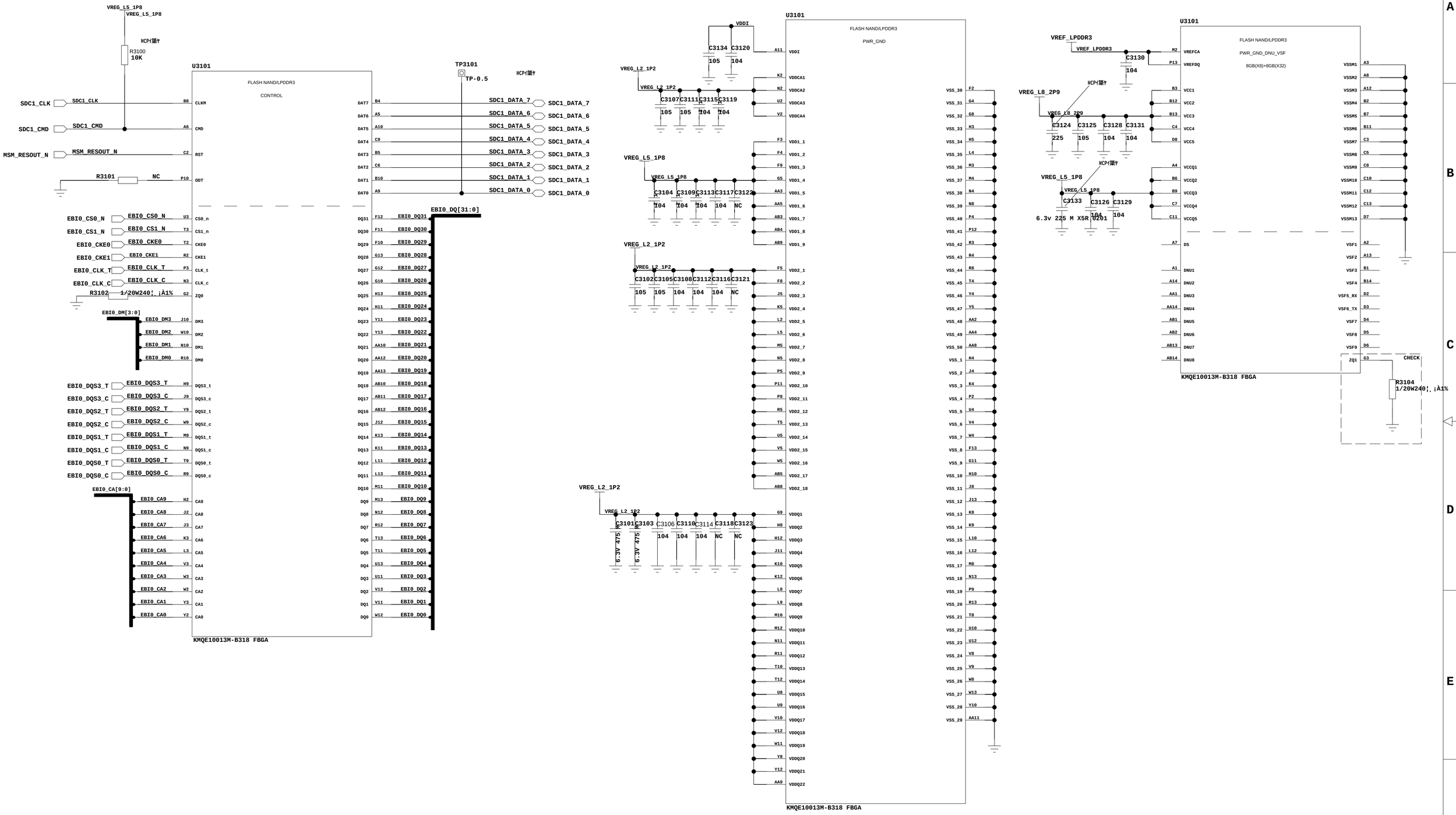
U3101
FLASH NAND/LPDDR3
CONTROL
KMQE10013M-B318 FBGA
VREG_L5_1P8
R3100
10K
MCP代號
SDC1_CLK
SDC1_CMD
MSM_RESOUT_N
R3101
NC
R3102
1/20W240¦¸ ¡À1%
EBI0_CS0_N
EBI0_CS1_N
EBI0_CKE0
EBI0_CKE1
EBI0_CLK_T
EBI0_CLK_C
EBI0_DM[3:0]
EBI0_DQS3_T
EBI0_DQS3_C
EBI0_DQS2_T
EBI0_DQS2_C
EBI0_DQS1_T
EBI0_DQS1_C
EBI0_DQS0_T
EBI0_DQS0_C
EBI0_CA[9:0]
TP3101
TP-0.5
SDC1_DATA_7
SDC1_DATA_6
SDC1_DATA_5
SDC1_DATA_4
SDC1_DATA_3
SDC1_DATA_2
SDC1_DATA_1
SDC1_DATA_0
EBI0_DQ[31:0]
U3101
FLASH NAND/LPDDR3
PWR_GND
KMQE10013M-B318 FBGA
VDDI
VREG_L2_1P2
VREG_L5_1P8
C3134 C3120
105 104
C3107 C3111 C3115 C3119
105 105 104 104
C3104 C3109 C3113 C3117 C3122
104 104 104 104 NC
C3102 C3105 C3108 C3112 C3116 C3121
105 105 104 104 104 NC
C3101 C3103 C3106 C3110 C3114 C3118 C3123
6.3V 475 6.3V 475 104 104 104 NC NC
U3101
FLASH NAND/LPDDR3
PWR_GND_DNU_VSF
8GB(X8)+8GB(X32)
KMQE10013M-B318 FBGA
VREF_LPDDR3
C3130
104
VREG_L8_2P9
C3124 C3125 C3128 C3131
225 105 104 104
C3133 C3126 C3129
6.3v 225 M X5R 0201 104 104
CHECK
R3104
1/20W240¦¸ ¡À1%

Approved By

SPEAKER PA

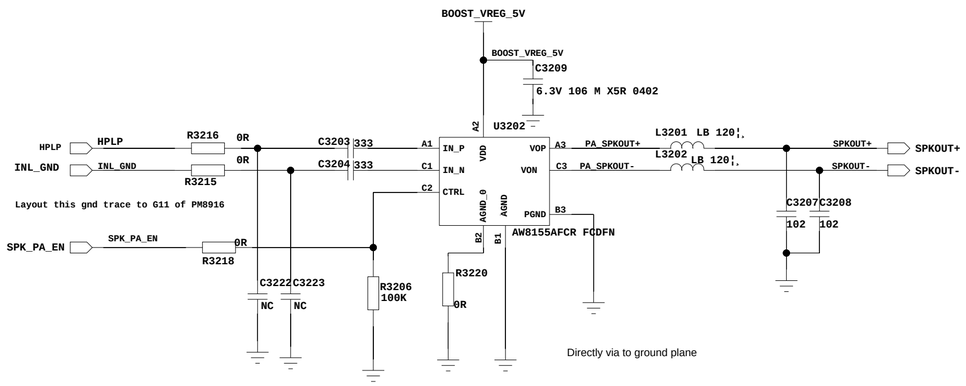

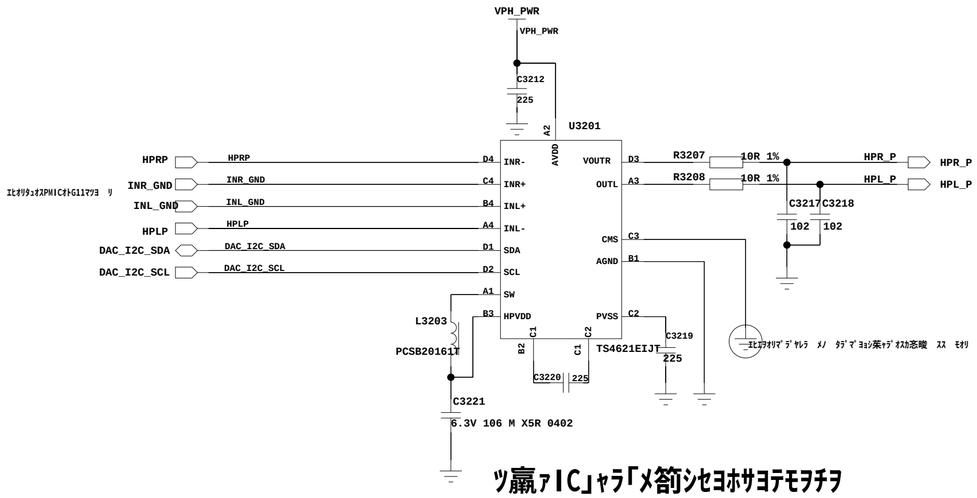

ツ贏ァIC」ャラ「メ箚シセヨホサヨテモヲチヲ

YDA_5v_POWER

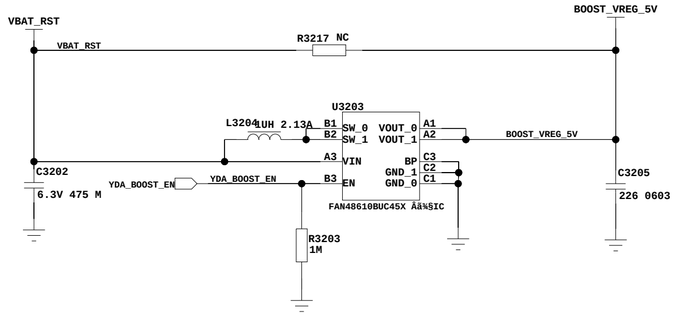

Approved By

¶ú»ú×ù

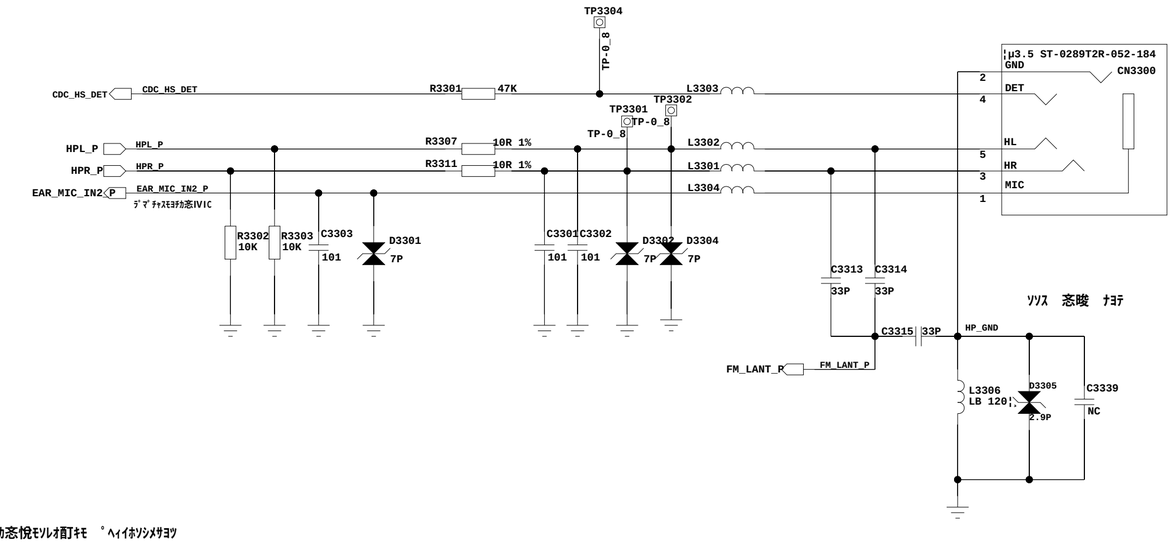

HP MIC

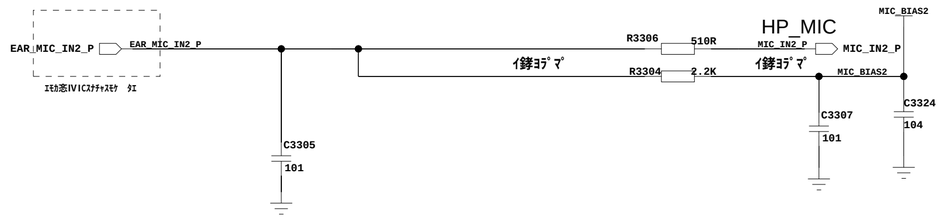

SUBBOARD CONN

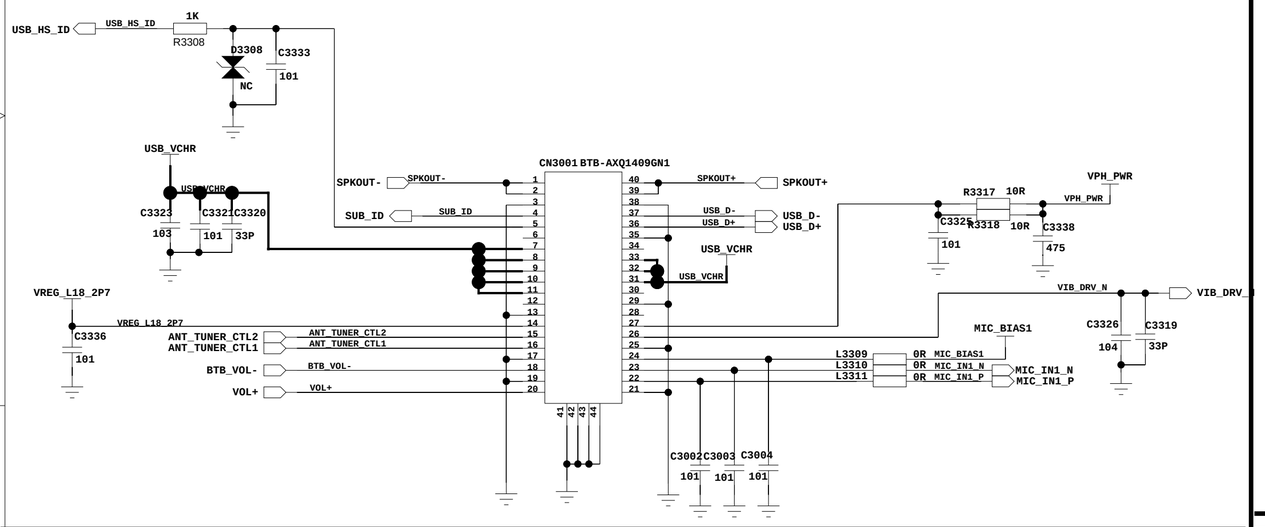

RGB LED DRIVER

Receiver

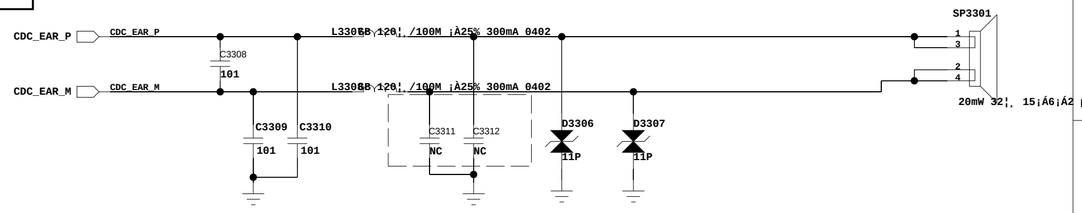

Approved By

LCD 。ﾀ5V Driver

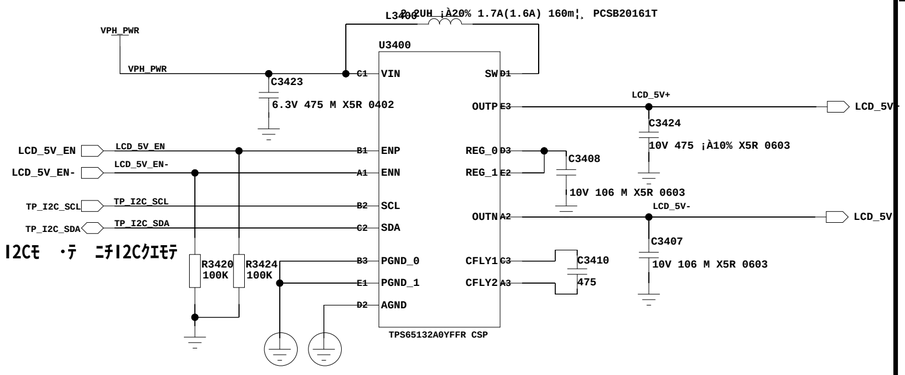

I2Cﾓ ･ﾃ ﾆﾁI2Cｸｴﾓﾃ

ｵ醸ｴｵﾘﾄ」ﾄ箏ﾘｷﾖｿｪﾏﾂﾖ ﾘ

tps65132 slave address 0X3E

LCM CONN

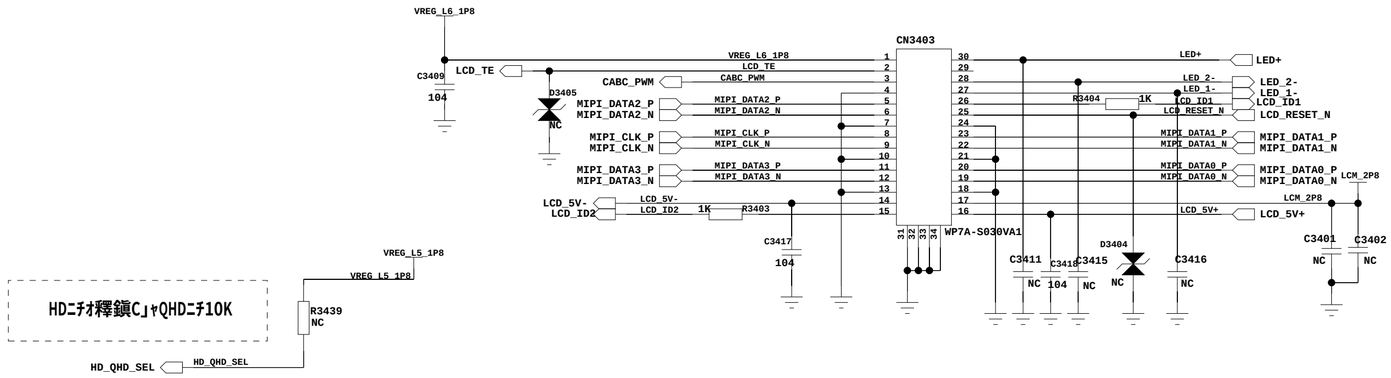

LCD LDO

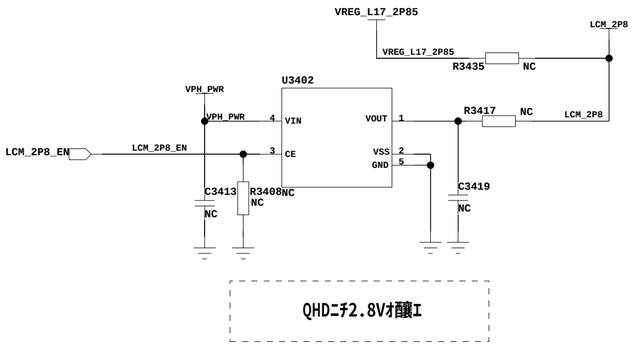

LCD BACKLIGHT

LM3630A slave address」ｺ0x38

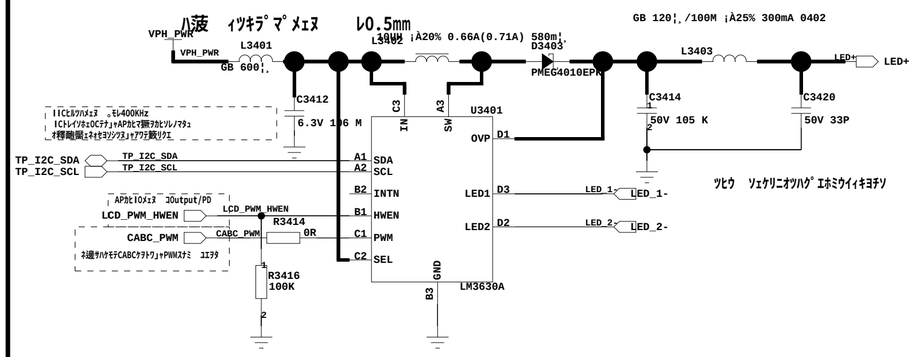

LCM CONN EMI

MIPIｲ築ﾔｵ贏。ﾁｿｿｿｽ鮓TBｶﾋ

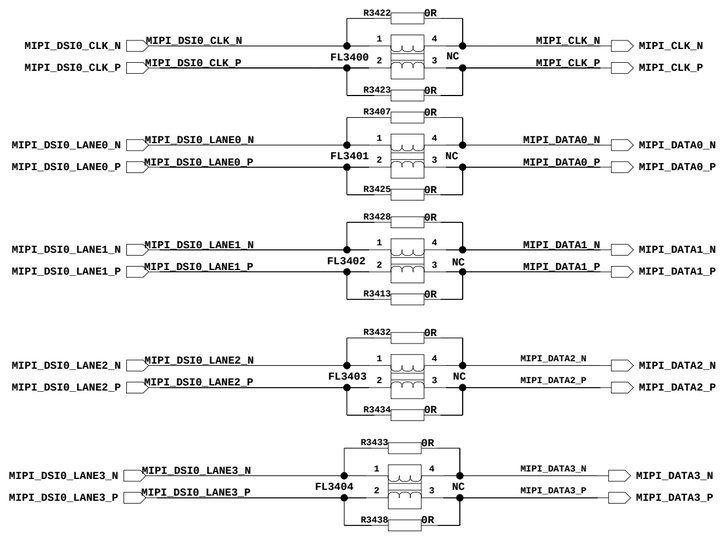

Approved By

USB SWITCH

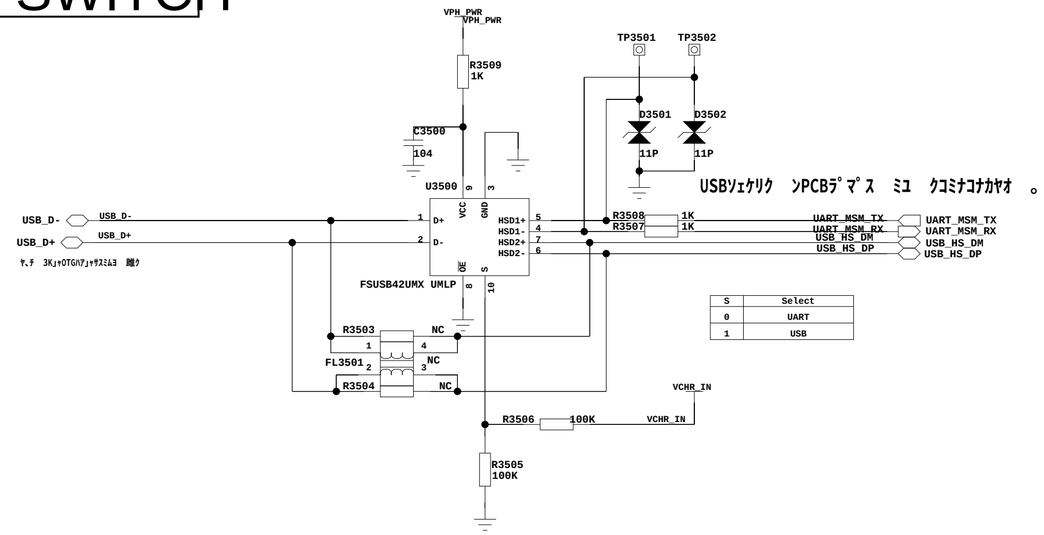

USBｿｪｹﾘｸ ﾝPCBﾗﾟﾏﾟｽ ﾐｭ ｸｺﾐﾅｺﾅｶﾔｵ 。

S	Select
0	UART
1	USB

UPDATE

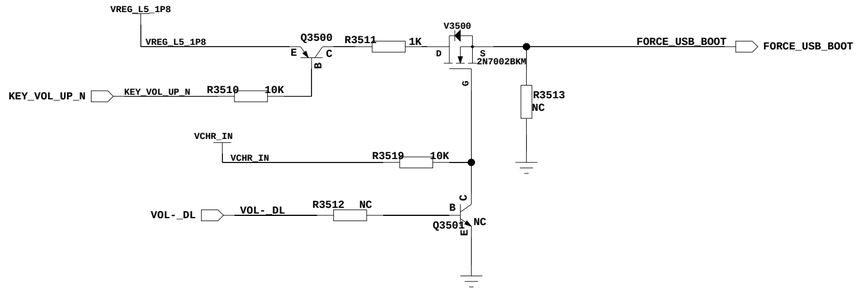

ﾏﾂﾔﾘﾄ｣ﾊｽｲ築ﾔｵ罐ｺｸﾟｵ酉ｽﾓﾐﾐｧ

OVP

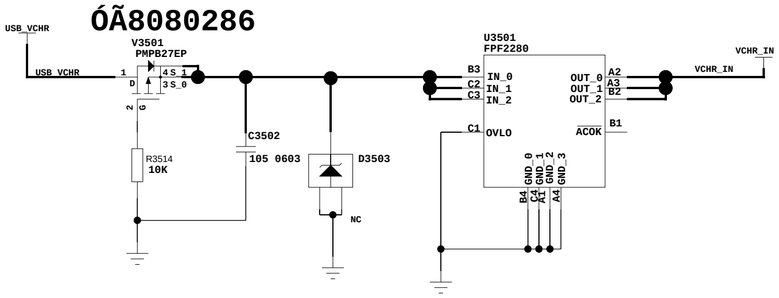

UVLOｽﾓｵﾘ｣ｬﾖｬｸ35V｢ｶ荘酵

Test Confige

ﾗﾛｲ簟｣ﾗｼｲ築ﾔｵ

BOOT MODE

CONF_0	CONF_1	Mode
0	0	Factory Mode
0	1	WLAN Final Test
1	0	RF mode
1	1	Ordinary Power On

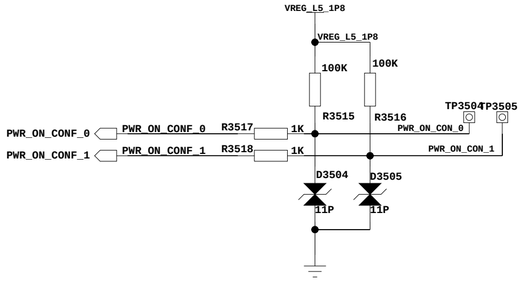

TEST POINT

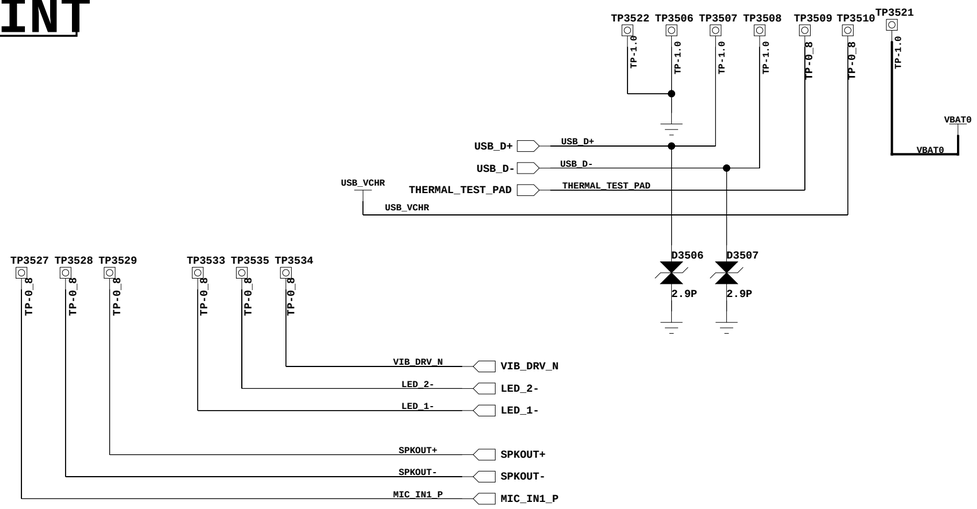

JTAG DEBUG

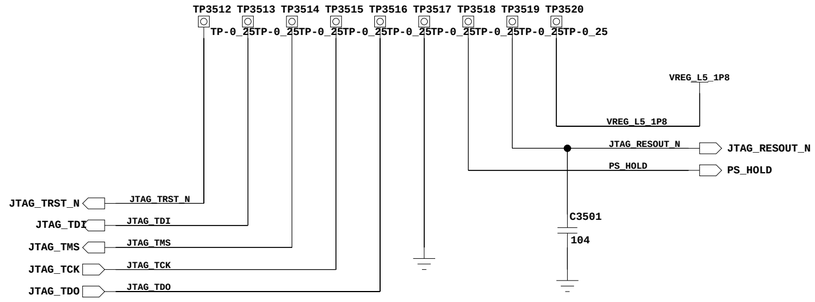

Approved By

G-sensor

LIS3DH Slave address 0X19(0011001)

ﾊｹﾓﾃMMA8452Q ﾊﾞ7C3602 ﾊﾞﾓﾃ104 ｵ酳ﾝ｣ｬﾊｹﾓﾃLIS3DHｻ ｰADXL346ﾊﾞ7C3602 NC

SAO ｿﾉﾓﾃｴI/ﾀﾘｺIICｵﾘｺｷｭｰｽﾓｻ ｵ酳ｽﾊｱ｣ｬMMA8452Q ｺ^ADXL346ｵﾄ7ｵｻｵﾘｺｷﾓ ｺ0x1D｣ｬLIS3DHｵﾄ7ｵｻｵﾘｺｷﾓｺ0x19

SAO ｽﾓｵﾍｵ酳ｽﾊｱ｣ｬMMA8452Q ｺ^ADXL346ｵﾄ7ｵｻｵﾘｺｷﾓ ｺ0x1C｣ｬLIS3DHｵﾄ7ｵｻｵﾘｺｷﾓｺ0x18

IICｦ÷¼þ¶ËEVT½×¶Ï´®Áª0Rµç×è£¬ÈçÎÞÎÊÌâ£¬PVT¶Ì½ÓÈ¥µô¡£

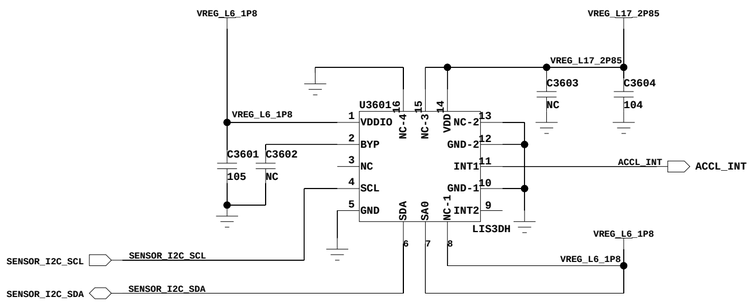

IICｦ÷¼þ¶ËEVT½×¶Ï´®Áª0Rµç×è£¬
ÈçÎÞÎÊÌâ£¬PVT¶Ì½ÓÈ¥µô¡£

LIS3DH slave address 0X19

M-sensor

MMC3416 slave address 0X30

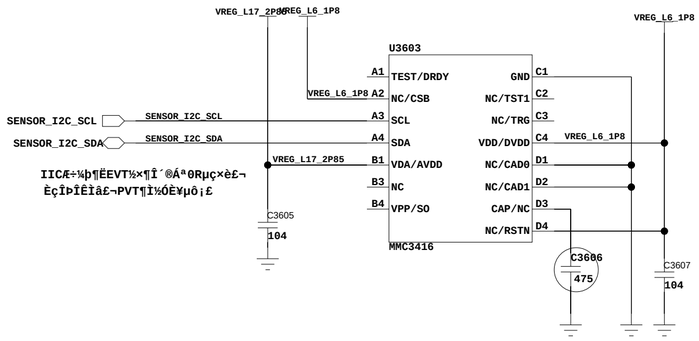

IICｦ÷¼þ¶ËEVT½×¶Ï´®Áª0Rµç×è£¬
ÈçÎÞÎÊÌâ£¬PVT¶Ì½ÓÈ¥µô¡£

ﾊｹﾓﾃAK8963C ｺ^YAS533ﾊｱ｣ｬｵ酳ﾝC3606 NC｡｣ﾊｹﾓﾃMMC3416｣ｬC3606ﾎｴ475ｵ酳ﾝ

ﾊｹﾓﾃAK8963C ｺ^YAS533ﾊｱ｣ｬｵ酳ﾝC3606 NC｡｣

CTP COB

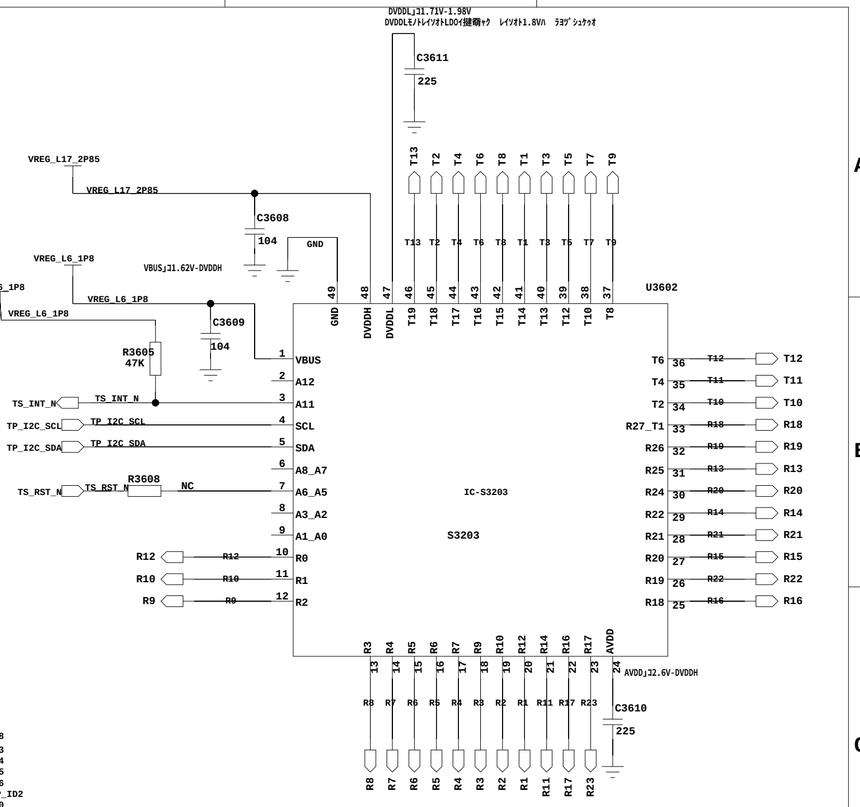

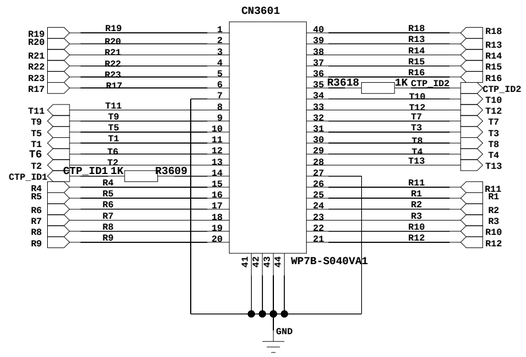

A.L.S.+P.S sensor module

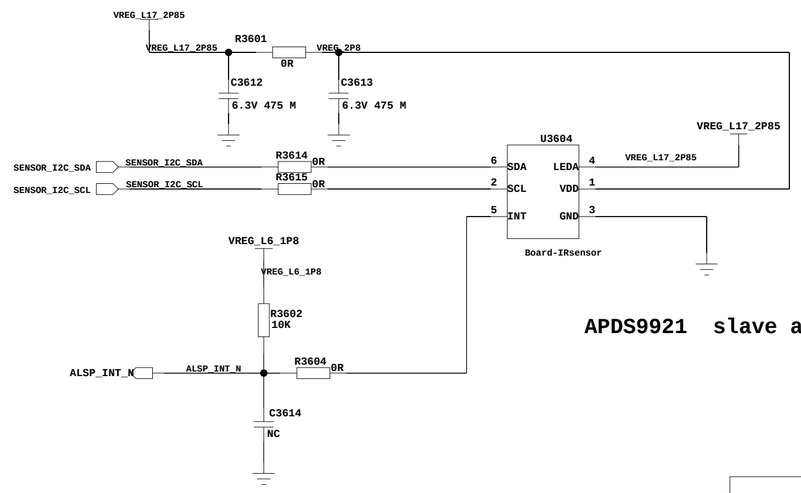

APDS9921 slave address 0x53

Approved By

SIM1 Card

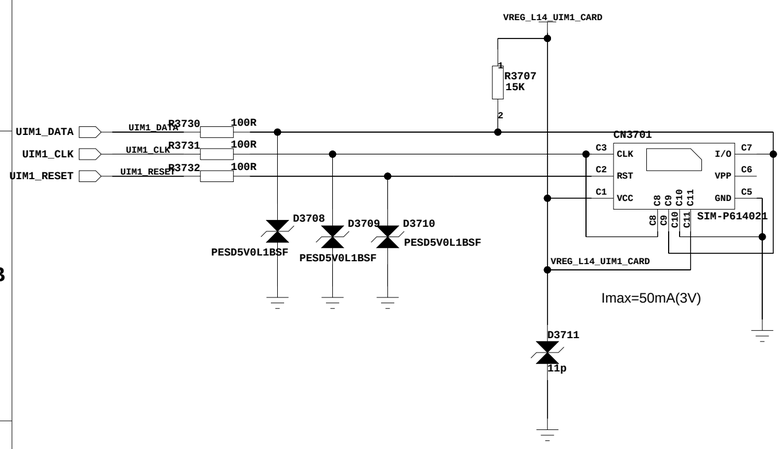

SIM2 Card

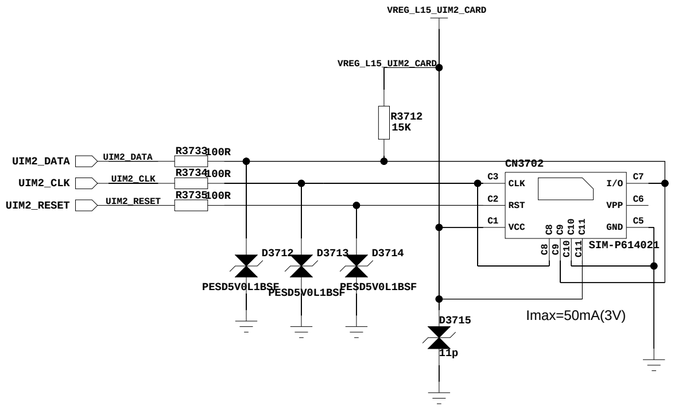

TF_CARD

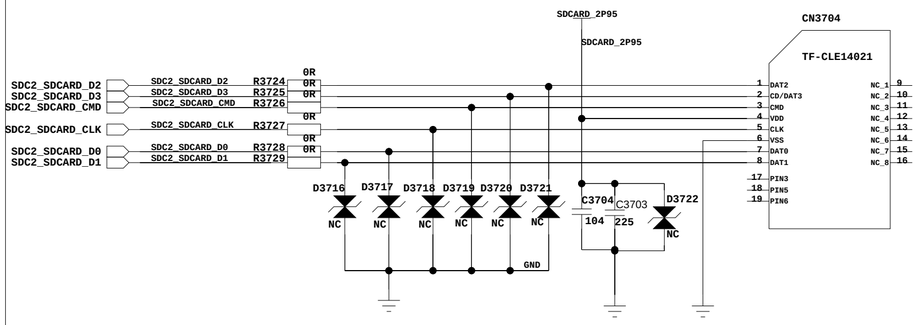

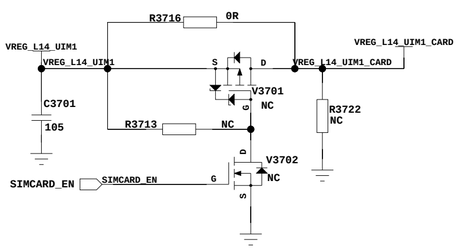

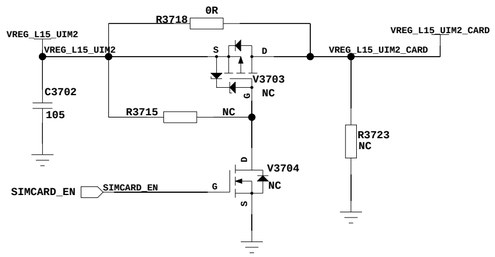

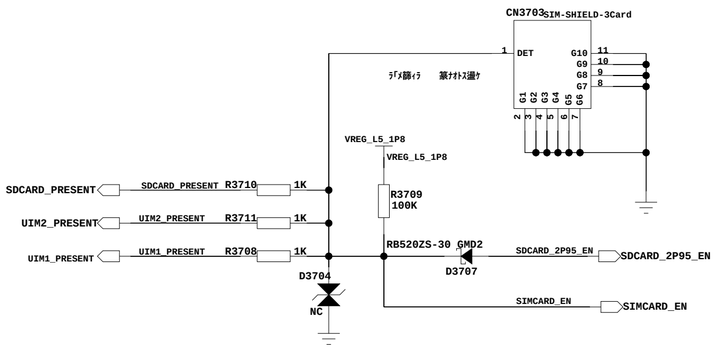

TF_LDO

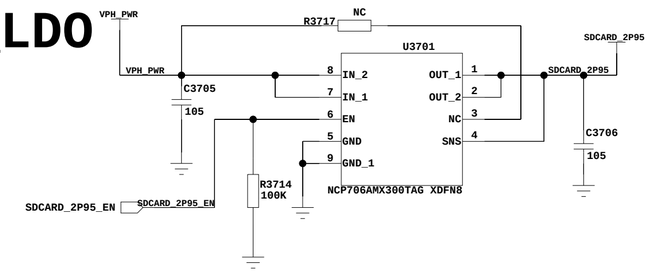

10K/24K

POWER&VOL KEY

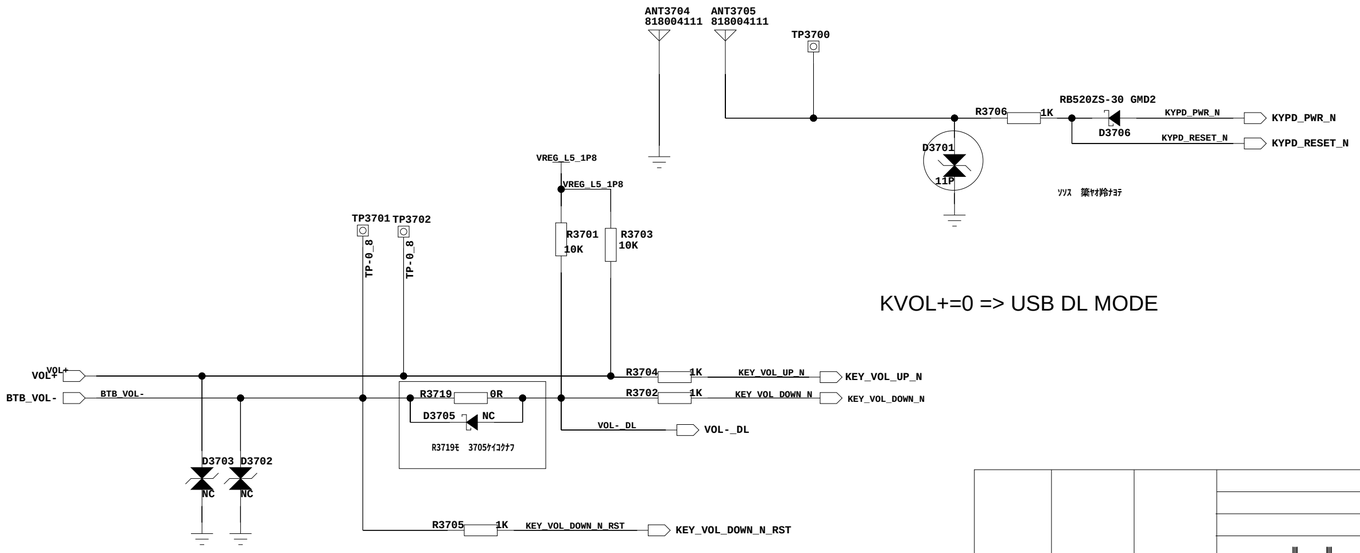

KVOL+=0 => USB DL MODE

Approved By

MAIN_Camera

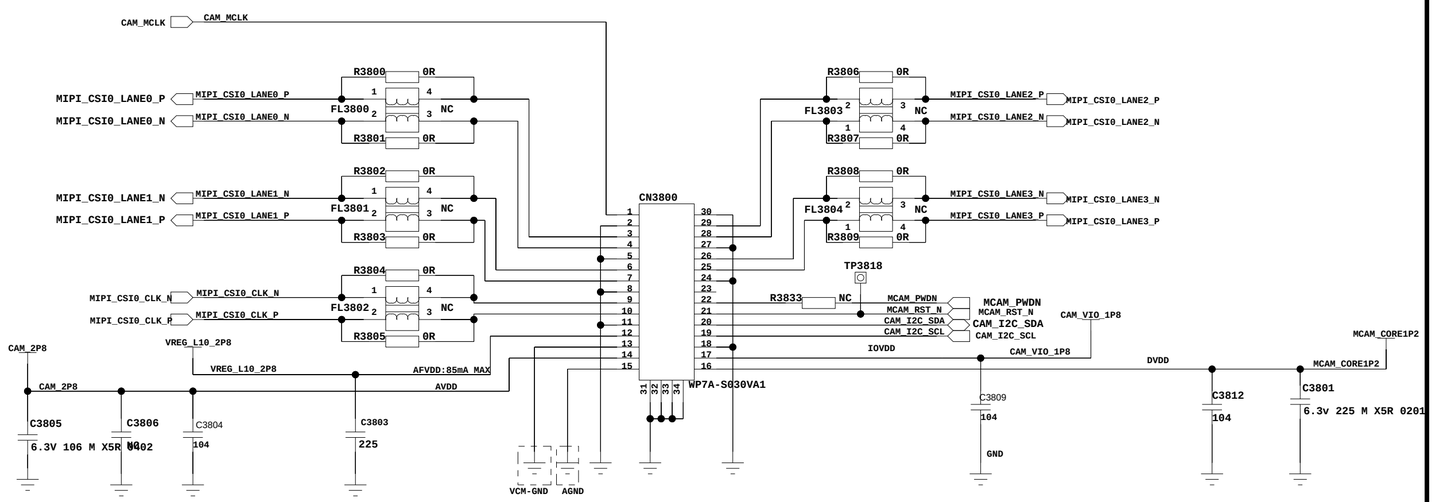

IMX179 slave address 0X21

SUB_Camera

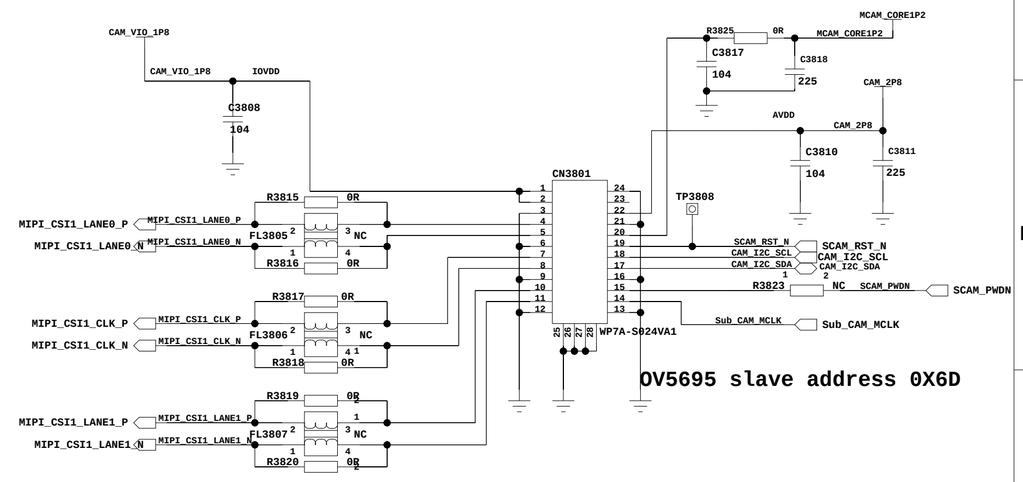

OV5695 slave address 0X6D

Camera_LDO

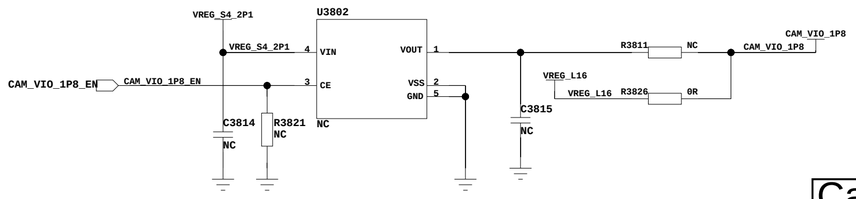

Camera_VDDIO

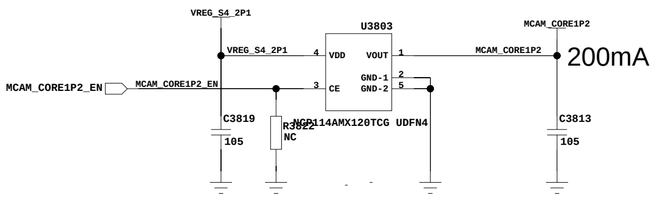

Camera_DVDD

Flash_LED_Driver

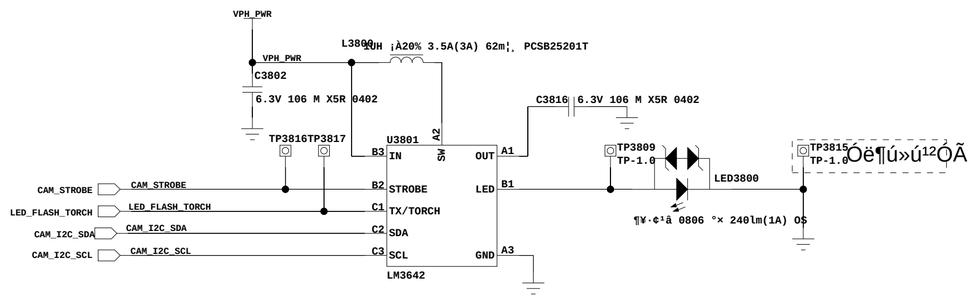

LM3642 slave address 0X63

Approved By

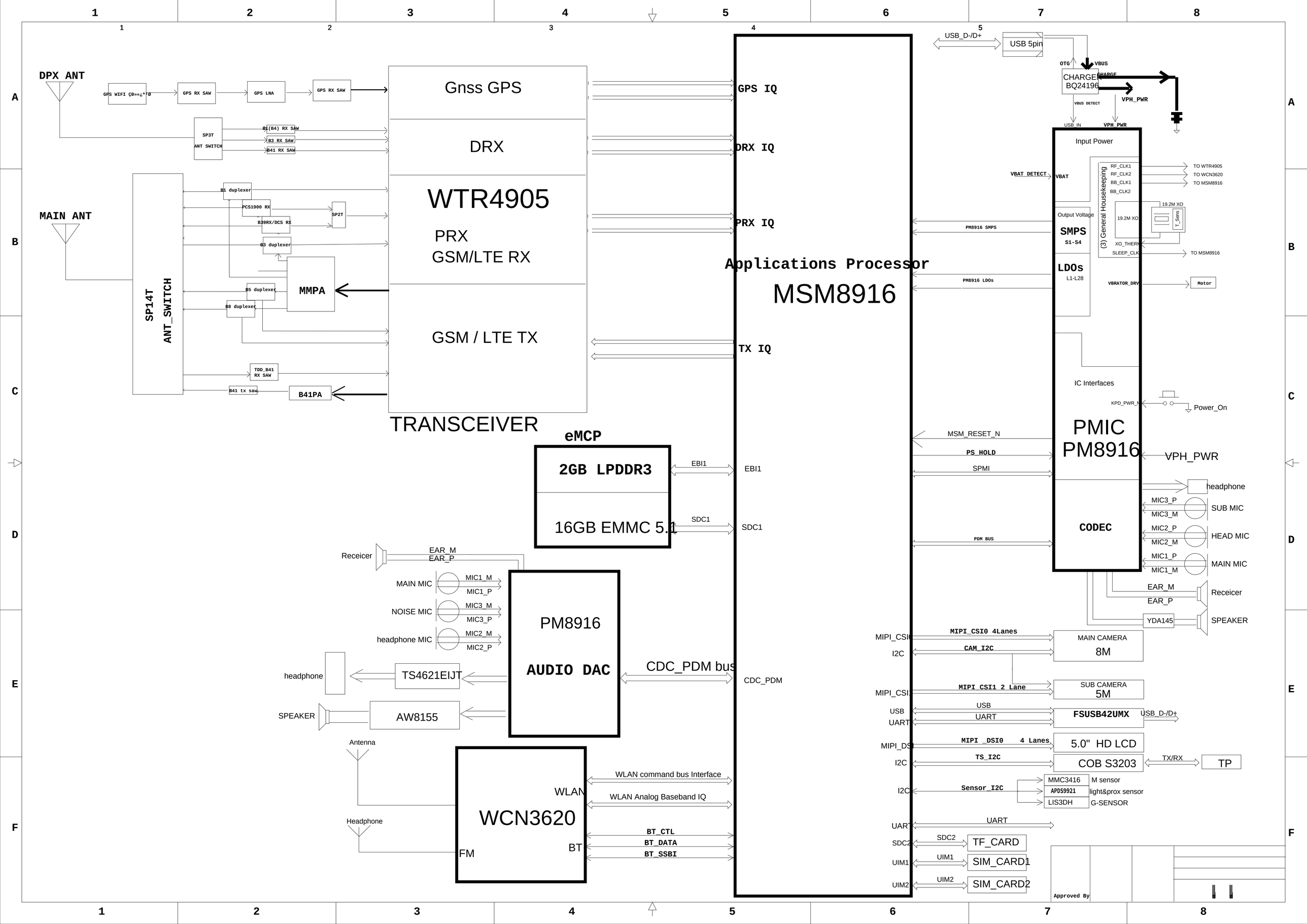
DPX ANT
GPS WIFI ÇÐ»»¿ª¹Ø
GPS RX SAW
GPS LNA
GPS RX SAW
SP3T
ANT SWITCH
B1(B4) RX SAW
B3 RX SAW
B41 RX SAW
MAIN ANT
SP14T
ANT_SWITCH
B1 duplexer
PCS1900 RX
B39RX/DCS RX
SP2T
B3 duplexer
MMPA
B5 duplexer
B8 duplexer
TDD_B41
RX SAW
B41 tx saw
B41PA
Gnss GPS
DRX
WTR4905
PRX
GSM/LTE RX
GSM / LTE TX
TRANSCEIVER
GPS IQ
DRX IQ
PRX IQ
TX IQ
Applications Processor
MSM8916
USB_D-/D+
USB 5pin
OTG
VBUS
CHARGER
BQ24196
CHARGE
VPH_PWR
VBUS DETECT
USB_IN
VPH_PWR
Input Power
VBAT_DETECT
VBAT
RF_CLK1
RF_CLK2
BB_CLK1
BB_CLK2
TO WTR4905
TO WCN3620
TO MSM8916
(3) General Housekeeping
19.2M XO
T_Sens
Output Voltage
SMPS
S1-S4
XO_THERM
SLEEP_CLK
TO MSM8916
PM8916 SMPS
LDOs
L1-L28
PM8916 LDOs
VBRATOR_DRV
Motor
IC Interfaces
KPD_PWR_N
Power_On
PMIC
PM8916
MSM_RESET_N
PS_HOLD
SPMI
VPH_PWR
CODEC
headphone
MIC3_P
MIC3_M
SUB MIC
MIC2_P
MIC2_M
HEAD MIC
MIC1_P
MIC1_M
MAIN MIC
PDM BUS
EAR_M
EAR_P
Receicer
YDA145
SPEAKER
eMCP
2GB LPDDR3
16GB EMMC 5.1
EBI1
SDC1
Receicer
EAR_M
EAR_P
MAIN MIC
MIC1_M
MIC1_P
NOISE MIC
MIC3_M
MIC3_P
headphone MIC
MIC2_M
MIC2_P
PM8916
AUDIO DAC
CDC_PDM bus
CDC_PDM
headphone
TS4621EIJT
SPEAKER
AW8155
MIPI_CSI0 4Lanes
MIPI_CSI0
I2C
CAM_I2C
MAIN CAMERA
8M
MIPI_CSI1 2 Lane
MIPI_CSI1
SUB CAMERA
5M
USB
UART
FSUSB42UMX
USB_D-/D+
MIPI _DSI0 4 Lanes
MIPI_DSI
5.0" HD LCD
TS_I2C
COB S3203
TX/RX
TP
Sensor_I2C
MMC3416
M sensor
APDS9921
light&prox sensor
LIS3DH
G-SENSOR
Antenna
Headphone
WCN3620
WLAN
FM
BT
WLAN command bus Interface
WLAN Analog Baseband IQ
BT_CTL
BT_DATA
BT_SSBI
UART
SDC2
TF_CARD
UIM1
SIM_CARD1
UIM2
SIM_CARD2
Approved By